PETROBRAS	TECHNICAL SPECIFICATION	Nº: I-ET-3010.1M-1400-190-P4X-001	
	CLIENT: SRGE	SHEET 1 of 48	
	JOB: REFERENCE BASIC DESIGN	1001056398 0010	
	AREA: BÚZIOS		
DP&T-SRGE	TITLE: TOPSIDE ARCHITECTURE MATERIALS AND EQUIPMENT SPECIFICATION	NP-2	
		ESUP	

MICROSOFT WORD / V. 2013 / I-ET-3010.1M-1400-190-P4X-001_0.DOCX

INDEX OF REVISIONS

REV.	DESCRIPTION AND/OR REVISED SHEETS
0	ORIGINAL ISSUE

	REV. 0	REV. A	REV. B	REV. C	REV. D	REV. E	REV. F	REV. G	REV. H
DATE	JUN.04.2019								
DESIGN	ESUP								
EXECUTION	GWERNECK								
CHECK	LÍDIA								
APPROVAL	LUCIANARM								

SUMMARY

1 OBJECTIVE

The objective of this technical specification is to present the basic requirements for the architectural works on the Laboratory, M-17 (Automation and Electrical), M-13 (Power Generation), M-16 (Lay-down area), Pull-in area and Portside Forward Lay-down area to be installed on (FPSO's designation), covering the design, fabrication, assembly, inspection, testing, supply of equipment, materials and spares, all in full compliance with the provisions of this document and its attachments, all referenced applicable codes, standards and regulations and, where applicable, the Classification Society (CS) regulations.

2 RULES AND REGULATIONS

The design, construction and appliances of the Laboratory, M-17 (Automation and Electrical) and M-13 (Power Generation) shall comply, but not being limited to, with the following applicable rules and regulations:

2.1 IMO – International Maritime Organization

2.1.1 IMO-RESOLUTION A-649 (16): Code for the Construction and Equipment of Mobile Offshore Drilling Units (MODU-CODE), 1989;

2.1.2 IMO-SOLAS: International Convention for the Safety of Life at Sea, 1974 and amendments in Force;

2.1.3 IMO-RESOLUTION MSC. 6 (48) / RESOLUTION MSC.1 (XLV): Amendments to the International Convention for the Safety of Life at Sea - 1993/ 1981;

2.1.4 NORMAM 01-CHAPTER 4-SECTION VII- Fire Protection Requirements for Materials and Appliances used on Board of Brazilian Ships;

2.1.5 IMO-RESOLUTION A-517 (13): Recommendation on Fire Test Procedures for A, B and F Class Division;

2.1.6 IMO-RESOLUTION A-472 (XII): Improved Recommendation on Test Method for Qualifying Marine Construction Materials as Non-Combustible;

2.1.7 IMO MODU CODE 2009 – Chapter 09 - Protection of accommodation spaces, service spaces and control stations;

2.1.8 IMO MODU CODE 2009 – Chapter 09 - Means of Escape;

2.1.9 IMO MODU CODE 2009 – Chapter 09 - Portable fire extinguishers in accommodation, service and working spaces.

2.2 Brazilian Legislation and Regulation

2.2.1 Regulatory norms of the Brazilian ministries whenever applicable, including NR-12 (safety in machinery and equipment), NR-17 (Ergonomia/ Ergonomics) and NR-37 (Safety and Health in Oil Platforms);

2.2.2 Regulations of the Brazilian Maritime Authority – NORMAM/DPC;

2.2.3 ABNT Standards whenever applicable;

2.2.4 CONAMA Resolutions of the Environment Ministry;

2.2.5 NOTA TECNICA CGPEG/DILIC/IBAMA No 01/11 Projeto de Controle de poluição.

2.3 Classification Society Rules

2.3.1 ABS Guidance Notes for the Application of Ergonomics to Marine Systems.

2.4 Petrobras Guidelines

2.4.1 DR-ENGP-M-I-1.3-R.4 – Safety Engineering;

2.4.2 DR-ENGP-I-1.15-R.3 – Color Coding;

2.4.3 DR-ENGP-M-II-P1-6.1-R.6 – General Criteria for Architecture of Production Units.

3 GENERAL

The equipment and materials supplied for Laboratory, M-17 (Automation and Electrical), M-13 (Power Generation), M-16 (Lay-down area), Pull-in area and Portside Forward Lay-down area shall be suitable for a 25-year design life and for use in a saline atmosphere, which additionally shall be subject to weather conditions. The products shall have been successfully tested and satisfy the requirements stated in this specification, as well as C.S. rules.

Potential Module Supplier must demonstrate that they have successfully supplied equipment and materials described on this specification for use on offshore marine environment similar to that in which the unit will be installed. Module Suppliers who are interested in bidding for the above are to provide a detailed reference list demonstrating their experience, capabilities and expertise. A Module Supplier Prequalification Questionnaire must be submitted for PNBV approval, including all data pertinent to its Scope of Supply.

Module Suppliers shall have an implemented Quality Management System that meets the requirements of the ISO-9000 series of Standards and a Safety Management System. Module Suppliers shall be also notified that all work carried out on the unit Project shall comply fully with C.S. rules and Requirements or Regulations listed in this specification. Respondents must indicate company name, contact details, managers and key personnel, company profile, and summary of related experience according to the Module Supplier Prequalification Questionnaire.

All equipment and materials shall be guaranteed by the Module Supplier. The equipment and materials warranty shall be clearly stated by the Module Supplier during the detailed design phase proposal analysis.

The following general requirements shall be implemented during the detailed design phase:

- The material finishing weight shall be updated during design phase in accordance with manufacturer information’s.
- All components shall be adequate to offshore humidity and corrosive environment with marine salts and hydrocarbons.

- Partition, lining and ceiling system, doors/ windows, floor covering system and insulation shall be provided with the characteristics stated on this specification. Equivalent material may be accepted provided the physical, chemical and mechanical characteristics are preserved. Any deviation of the requirements stated on this specification shall be submitted during Technical proposal Analysis phase (detailing) in order to be analyzed and approved by PNBV.
- All insulation materials, linings, ceilings, floors, upholstery materials, windows and doors as well, shall be specified in accordance with applicable rules and regulations. All the listed material shall be non-combustible / fire-retardant type. The use of combustible materials, such as acrylic, polycarbonates, PVC, and others, is not allowed.
- Fire rated doors, removable panels and windows shall be certified to have the same fire rating as the wall they are installed on.
- Doors and removable panel dimensions shall allow for the transit of people, stretchers, equipment parts, etc., and shall not impose an obstacle for any of these activities.
- Compartments with areas exceeding 20 m², normally uninhabited or that present risks for users, like compartments protected by the CO2 System, shall have two exits.
- In Laboratory floor-to-ceiling minimum clearance shall be of 3000 mm and, for office area, of 2600 mm.
- Wall and ceiling panels shall be provided with access hatches and/or access doors. These accesses shall be located during the detailed design phase according to maintenance needs and requirements. The detail design phase shall present a drawing with the detail and location of these hatches.
- All Windows shall have blinds, which shall remain non-flammable or flame retardant after cleaning, and shall be pre-shrunk. Curtains shall allow repeated washing.
- All necessary accessories and materials for the installation of blinds shall be provided allowing its fixation in open and closed position.
- In partition walls, doors and furniture, all glass made visors and windows shall be composed of laminated glass, so the material do not produce splinter whenever subjected to impact or explosion.
- One key cutting machine shall be supplied onboard for duplication of lost keys. This machine shall be supplied by the doors manufacturer, together with the doors and relative keys. Location of machine will be defined by PNBV in the detailed design phase.
- A visual communication/information design (including safety signs) shall be carried out during the detail design phase in order to guarantee the easy location of all compartments by its users as well as a pleasing and safe ambient. PNBV shall be consulted in order to provide all information regarding PNBV standard signalization to be followed.
- All equipment and Furniture shall have commercial representation in Brazil, in order to guarantee maintenance or replacement if needed.
- The handrails of internal staircases and corridors shall be constructed in stainless steel or aluminum. Location shall be in accordance with layout drawings.

- The maximum accepted angle for access stairways shall be 38/41 degrees.
- Fire hydrants and extinguishers shall be inlaid in the bulkheads when installed in environment internally coated. Installation shall follow the applicable rules.
- A ring main for high-pressure wash down stations shall be considered in areas where heavy cleaning will take place.
- The overall and local cargo capacities shall be painted on the floor and lower guard-rail stop. The areas for the transfer of cargo will be lined with wooden planks for industrial use.
- The internal layout of the compartments must have enough flexibility in order to allow adjustments required by work activities.
- The internal layout design shall be executed individually on a scale of 1:50, including at least 2 (two) sections and any other view required for complete clarification of the space. These drawings shall contain main dimensions, furniture location, pictures and any other object.
- Compartments location and area shall be indicated in the arrangement drawings. The layout showing all furniture and equipment, as well as its quantity must be entered into architecture arrangements.
- At least, two colors per material shall be submitted to PNBV approval, to define the Decoration Scheme, including catalogs containing specification colors and characteristics of all materials, besides the typical arrangement. If the Module has more than one deck, variety of colors per deck shall be presented, since the use of different colors for covering materials per deck makes easier their identification.
- All materials and components supplied shall be new, delivered clean and in proper use conditions and of quality compatible with the requirements in this document.
- All materials, before and after installation, shall be protected against damage of any kind (abrasion, dirt, oxidation, etc.).
- For Ergonomic requirements, refer to document I-ET-3010.1M-1350-196-P4X-001 – ERGONOMIC REQUIREMENTS FOR TOPSIDES.
- The noise of Laboratory, M-17 and M-13 shall be in accordance with I-ET-3010.1M-1200-300-P4X-001 – NOISE CONTROL REQUIREMENTS FOR TOPSIDE. Items like insulation material, wall and ceiling panels, doors, windows and floor covering shall be provided in order to comply with noise and vibration analysis report developed in the detailed design phase.
- The Topside Automation and Electrical Panels Room (AEPR), located in M-17, shall be considered as an inhabited compartment and all the covering materials shall be according to document I-DE-3010.1M-1428-190-P4X-001 - M-17 - AUTOMATION & ELECTRICAL - ARCHITECTURE PLAN. For insulation materials, refer to document I-DE-3010.1M-1428-190-P4X-002 - M-17 - AUTOMATION & ELECTRICAL - DOORS AND INSULATION PLAN. All the covering and insulation materials shall be confirmed in the detailed design phase, according to Noise Report. As a reference, the document I-ET-3010.1M-1200-300-P4X-001 – NOISE CONTROL REQUIREMENTS FOR TOPSIDE establishes 60 dB for local control room areas.

- Paints, varnishes and other finishes used on exposed interior surfaces shall be in accordance with regulations and C.S. rules and shall not be capable of producing excessive quantities of smoke or offer an undue fire hazard.
- Compartments affected by structure borne noise shall be isolated considering the following:
  - Decks shall be protected making use of a primary deck (if floor finishing is required), combined with vibration damping material and steel tiles 1.5 to 2.0 mm thickness. In this case, the floor covering shall be a sandwich construction.
  - Bulkheads shall be protected by a combination wall, for vibration damping and sound reduction, making use of a vibration damping material and steel tiles 1.5 to 2.0 mm thickness. When applicable, a wall panel shall be installed.
- For details, see documents:
  - I-DE-3010.1M-1411-190-P4X-001 – M-01 - REMOTE PANELS ROOM - ARCHITECTURE PLAN;
  - I-DE-3010.1M-1411-190-P4X-002 – M-01 - REMOTE PANELS ROOM - DOORS AND INSULATION PLAN;
  - I-DE-3010.1M-1424-190-P4X-001 – M-13 - ELECTRICAL EQUIPMENT ROOMS - ARCHITECTURE PLAN;
  - I-DE-3010.1M-1424-190-P4X-002 – M-13 - ELECTRICAL EQUIPMENT ROOMS - DOORS AND INSULATION PLAN;
  - I-DE-3010.1M-1428-190-P4X-001 – M-17 - AUTOMATION & ELECTRICAL - ARCHITECTURE PLAN;
  - I-DE-3010.1M-1428-190-P4X-002 – M-17 - AUTOMATION & ELECTRICAL - DOORS AND INSULATION PLAN;
  - I-DE-3010.1M-8222-190-P4X-001 – LABORATORY – LAYOUT AND SECTION – EQUIPMENT AND FURNITURE;
  - I-DE-3010.1M-8222-190-P4X-002 – LABORATORY – ARCHITECTURE ARRANGEMENT;
  - I-DE-3010.1M-8222-190-P4X-003 – LABORATORY - DOORS AND INSULATION PLAN.
- The structure borne vibrations shall be transformed from kinetic energy into heat by the deformation in the damping layer. The damping layer consists of a polyurethane compound of 1.0 to 1.5 mm thickness and shall be low-flame spread.
- The detailed design shall follow the noise prediction study and provide, if required, the insulation and all components in accordance with regulations and C.S. rules.
- The following definitions shall be observed:
  - *Design*: The specification and complementary plans resulting from this design standard.
  - *C.S.*: The Classification Society Bureau under whose Rules, Regulations and Survey the unit shall be certified.

- *Authorities*: The National Shipping Inspection Bureau of the Country of Registry under whose Laws and Regulations the unit will be registered.
- *POB*: People On Board.
- *UEP*: Unidade Estacionária de Produção
- *Module Supplier*: Is responsible for project, assembly, erection, construction, fabrication, test and furnishing of the Module.
- *BIDDER*: Is defined as the responsible for the lift, hook up, installation and integration of all Modules on the Unit Hull.
- *HULL CONTRACTOR*: Is defined as the responsible for all equipment, installations and services related to conversion of Unit Hull.

– The following definitions shall be observed during the detailed design phase regarding compartments characteristics:

3.1 Service Compartments (Rooms / Areas):

Are those compartments where several services are carried out to guarantee the operation, maintenance of the unit and assistance of its users.

– Laboratory (Equipment area and office);

3.2 Industrial Compartments (Rooms / Areas):

Compartments inside M-17 & M-13 such as CO_2 Central Room, Topside HVAC Room, Topside Batteries Rooms, Topside Normal Transformers Room, Topside Normal Panels Room 1, Topside Normal Panel Room 2 and any other area or compartment not listed above shall be considered as industrial area/room.

The design shall provide all equipment location taking into account the easy access to all parts for operation and maintenance. Cargo handling shall be provided whenever required and shall be detailed in such way that provides all facilities for entrance and exit of the equipment without disturbing the work activity in accordance with general arrangement drawings and document I-ET- 3010.1M-5266-630-P4X-001 -TOPSIDE MECHANICAL HANDLING PROCEDURES.

3.3 Working Rooms:

Are those compartments where working activities are carried out to maintain the unit production and operation.

– Topside Automation and Electrical Panels Room (AEPR).

4 PARTITIONS, LININGS AND CEILING SYSTEM

4.1 General

4.1.1 All materials, components and fittings, used in construction shall be "non-combustible" type and follow current regulations. Material and finishes to components and fittings used in partitions, linings and ceiling panels shall be non-flammable, shall not be able to emit flame and shall have certified low surface spread of flame characteristics in accordance with current rulings.

4.1.2 Manufacturer instructions shall prevail regarding partitions requirements design and installation, unless otherwise specified.

4.1.3 Wall panel system shall be installed under the in site supervision of the manufacturer(s).

4.2 Ceiling System

4.2.1 The ceiling panels shall be built with a flat face and constructed with galvanized steel sheet 0,5 mm thick (minimum). Halogen free material finishing shall be provided for all compartments. The ceiling panels shall have steel on both sides and be capable to hold required ventilation devices without support.

4.2.2 The ceiling system shall be self-supporting, capable to bear the weight of 25 kg load without suspension, with an inter-locking joint and easily dismounted for maintenance purposes.

4.2.3 The ceiling panels shall be supported by the wall panel top profiles. Approved hinged access ceiling lights shall be provided to ensure the B-15 rating and full compatibility. Services shall be installed between ceiling panel and steel deck and shall not be supported by any part of the ceiling system.

4.2.4 Hinged inspection panels, which combine with the surrounding ceiling panels, shall be provided where inspection and maintenance to installed services above the ceiling is required. The clear opening shall be minimum 500 x 500 mm.

4.2.5 The hatch construction shall be strong enough to allow for repeated opening. Unless the hatch has a fail-safe opening mechanism, a safety chain shall be included to avoid accidental opening.

4.2.6 Insulation around ceiling penetration (e.g., lighting fixtures, diffusers, sprinklers, ducting, etc.) shall maintain the overall integrity of the ceiling fire rating. The complete ceiling shall in every respect be compatible with the wall system.

4.2.7 The ceiling panels system shall be B-15 class recognized by C.S. Extra insulation shall not be installed above the ceiling panels in order to achieve the B class fire rating. The mineral wool used shall be non-combustible and free of asbestos. Minimum density shall be in accordance with manufacturer's standard and suitable regarding noise aspects.

4.2.8 The ceiling panels shall be available with the following characteristics:

- Width about 600 mm, Thickness 50 mm, length of ceiling panel max. 3000 mm free span, B-15 fire class, weight about 18 kg/m².

4.2.9 Special tools required for ceiling panels' installation and maintenance shall be provided for each floor of every module in which this material is installed, such as the Laboratory and AEPR.

4.3 Partition and Lining System

4.3.1 The partition and lining systems shall be fully compatible with all installations, elements, fixtures, fittings and penetrations, as well as all requirements to stability, sound reduction and fire class. The system shall be chemical resistant, halogen-free, low flame spread surface, low calorific value, no chlorides, no cyanides and no dioxin.

4.3.2 Partition and lining panel colors shall be in accordance with the color schedule. At least, two colors per deck shall be available. Even if there is only one deck, at least two colors per material shall be submitted to PNBV approval, to define the Decoration Scheme that shall be submitted to PNBV approval.

4.3.3 Partitions in wet rooms shall be completely splash-proof, non-combustible and easy to maintain and clean.

4.3.4 The internal glazed partition system shall consist of a series of fire rated glazed or solid panels, which are supported by framing members. Partitions of the same fire rating, wherever possible, shall have the same thickness, regardless of span. The system shall be finished complete with all insulation, make-up pieces and cover plates of the same material and finishes as the glazed partition system. Glazing shall be laminated security glass. Glazed partition shall be built up by a framework of stainless steel profiles covered with insulation. The profiles shall be fixed to the framework as a “clip on” solution with no visible bolts or blind rivets. The glass type shall be clear transparent fire resistant with intumescent interlayer and sound reduction: field value of ≥ 41 dB, B class, at least 30 mm thick. Maximum glass size shall be in accordance with manufacturer standard. Glazed partition shall be replaced by glass window if previously agreed with PNBV.

4.3.5 Where mineral wool insulation is used, it shall be non-combustible, and fully bonded to the rear of the galvanized panels. Steel sheets used for panel faces shall be galvanized on both sides prior to construction of the complete panel.

4.3.6 Partition and lining panels shall be available with a width about 600 mm.

4.3.7 The wall system, unless otherwise specified, shall not exceed a maximum of 75 mm in overall thickness, including the thickness of applied finishes (Refer to item 4.4).

4.4 Construction and Materials

4.4.1 The partition system shall be modular system, sandwich construction steel faced with a flush surface finishing. The system shall be capable to suppress services and each panel must be fully dismountable for maintenance or replacement purposes.

4.4.2 The standard panel system shall include special jointing profiles that allow panels already installed to be removed. The detachable panel construction should be used only for occasional access. For frequent access the inspection door shall be installed.

4.4.3 The panel system should be assembled by the use of jointing “H” profiles in order to assure the wire and cables passage and also to provide a quick access when replacing the panels.

4.4.4 Self-supporting ceilings shall be fire tested with the ceiling panels fixed to the top profiles on the wall panels with screws or pop rivets.

4.4.5 The lining system shall have the same characteristics of the partition. The joints between partitions and ceiling panels as well partitions and linings shall be detailed in order to avoid loss of performance regarding sound and vibration transmission.

4.4.6 The wall installation may possibly use gaskets between steel coaming and wall panel in order to minimize the effects of noise vibration.

4.4.7 The partition/lining system shall satisfy the requirements relating to noise, thermal and fire characteristics. The system used shall be so designed, constructed and installed to provide internal walls of certified B-15 fire rating in accordance with SOLAS regulations and amendments.

4.4.8 The partitioning system shall consist of:

4.4.9 Partition: Wall panels' thickness shall be 50 mm with 45 dB noise reduction minimum. The finishing shall be halogen free surface type and impressed directly into the galvanized steel sheet on both sides.

4.4.10 Lining: Lining panels' thickness shall be 50 mm with 45 dB noise reduction minimum. The finishing shall be halogen free surface type and impressed directly into the galvanized steel sheet on one side and the other side with galvanized steel finishing.

4.4.11 Ceiling: Self-supporting system with halogen free surface material finishing, impressed directly into the steel sheet, 50 mm thickness. Noise reduction of RW=45 dB, NRC 0.60 (minimum).

4.4.12 Note: Lining panels with 32 dB sound reduction shall be used provided that they are suitable regarding noise aspects.

4.4.13 All material construction shall be provided in order to comply with noise and vibration analysis report developed.

4.4.14 In all cases, ease of removability of any panel with minimal disturbance to adjacent panels shall be assured.

4.4.15 Wall panel system colors shall be in accordance with the color scheme for Laboratory and M-17 (AEPR), to be submitted to PNBV approval.

4.4.16 Partitions in wet rooms shall be completely splash-proof and easy to maintain and clean.

4.5 Thermal Properties

4.5.1 The thermal insulation factor achieved by the wall panels shall be according to I-ET-3010.1M-5250-300-P4X-001 - HVAC SYSTEM DESIGN.

4.6 Sound Reduction

4.6.1 The installed system shall be capable of providing a verified sound reduction in accordance with item 4.4 for Laboratory and any other compartment where wall and ceiling panels are required (as AEPR, in M-17 Module), and shall be confirmed with noise and vibration analysis report developed in the detailed design phase.

4.6.2 All material construction shall be provided in order to comply with noise and vibration analysis report.

4.6.3 The detailed design phase shall verify if the partition, lining and ceiling system stated in this specification is suitable to provide the required noise results for inhabited compartments located in Industrial Area. If the noise values do not

achieve the required values, the system shall be integrated regarding insulation (structural and airborne damping material and floating floor), floor covering system and lining/partition system in order to comply with the requirements stated in I-ET-3010.1M-1200-300-P4X-001 – NOISE CONTROL REQUIREMENTS FOR TOPSIDE.

4.7 Service Conditions

4.7.1 The partitioning system shall be suitable for use in fully air-conditioned environment.

4.8 Reinforcements and Fixings

4.8.1 Wall-mounted equipment shall always be within the manufacturer's specified maximum capacity for the partition system. Wall-mounted equipment shall be directly supported by the main frame or the structure supporting the wall panels.

4.8.2 Fixings and reinforcements shall enable future removal and re-fixing of equipment. All reinforcements shall be concealed within the wall panels.

4.8.3 Irrespective of the weights of small fittings and fixtures which are to be wall mounted, panels shall be provided with suitable solid fixed backings, fully concealed within the wall construction, to accept fixings in order to ensure easy replacement of fittings after removal.

4.9 Miscellaneous Components, Trims and Finishes

4.9.1 All profiles, panels, trims, joints, standard and support profiles shall be supplied to ensure a complete installation.

4.9.2 As far as possible, frames, panels, trims, joints, standard and support profiles shall be supplied in available standard sizes and lengths. The joints of the system shall be installed in order to minimize sound conduction. The design and installation of the wall shall use standard components to the greatest extent possible, with due regard to visual appearance and functional durability. The Module Suppliers shall provide suitable heavy-duty skirting and trimmings for all wall bases and joints. All panels shall be supplied with factory applied finishing.

4.10 Supply

4.10.1 The wall and ceiling panels shall be supplied with easily removable protective foil, sufficient to protect finishing during storage, handling, construction and commissioning.

4.10.2 All panels incorporating special items or panels designed for particular application shall be supplied clearly marked.

5 "B", "A", "H" AND "J" CLASS DOORS

5.1 General

5.1.1 The "B", "A", "H" and "J" rated doors shall be fully compatible with the proprietary partition systems. "J", "H", "A" and "B" class doors shall be fully tested and certified as "J", "H", "A" or "B" doors in accordance with international applicable

requirements and criteria. “A” rated doors shall be fitted with permanently attached means of self-closing. Holdback catches or hooks shall be provided to all “B” class doors.

5.1.2 Doors Sound absorption shall be a minimum of 39 dB (ventilation grille not included). All doors shall have suitable Doors Sound Absorption in order to comply with noise and vibration analysis report developed in the detailed design phase.

5.1.3 Doors, with associated hardware shall be designed and arranged according to ergonomic principles so that the potential for injury to persons is reduced. Door assemblies shall be easily operable in a hazardous or accidental situation.

5.1.4 Panic bars shall be provided on doors in areas where there is a risk of congestion or panic. At least, all internal doors located in Escape routes and Muster stations shall have panic bars.

5.1.5 Doors located in Escape routes shall not be fitted with locking devices.

5.1.6 Kick plates (300 mm height) and trolley protection plates (800 mm height) in brushed stainless steel shall be provided for hinged doors in traffic areas to protect the Laboratory doors from passage of workers that need to pass through the doors using carts and to prevent damage to the doors that may be caused with the passage of workers using trolleys in M-17 and M-13 Modules.

5.1.7 Kick plates and trolley protection plates shall be mechanically fixed with flush fixings. There shall be no sharp or protruding edges.

5.1.8 Threshold detailing and door arrangement shall stop all ingress of water from decks.

5.1.9 A preliminary schedule with doors’ characteristics (class, dimensions, accessories etc) shall be developed as part of the basic design phase. It shall be continuously updated throughout the various project phases, until all required information is specified prior to procurement of the doors.

5.1.10 “A” class doors shall be gastight in compartments provided with CO_2 system, where there is a differential pressure. These doors shall open outwards and shall be provided with hydraulic door closer. Leakage rate shall not exceed $0.5 m^3/m^2h$ at 50 Pa over pressure following prolonged use, or specified by the project. The test certificate shall be provided with each door type. If there is any divergence between the basic arrangement drawing and C.S. Rules, C.S. rules shall prevail.

5.1.11 “A” rated doors shall be fully tested and certified in accordance with the Classification Society requirements. All required thresholds shall be dimensionally as low possible, without impairing function with regards to fire rating, noise reduction, and ability to stop ingress of water.

5.1.12 Doors through which regular passage of trolleys must be allowed shall have the thresholds so arranged as to provide an absolute minimum of obstructions. This may be achieved by the use of thresholds with integral ramps, or by using deck leveling screeds and associated floor finishes creating local ramps to compensate threshold heights.

5.1.13 All door leaves shall be fully insulated without any air pockets. Insulation fibers shall be sealed to prevent any fibers from being released to the environment.

5.1.14 Hinged doors with 2500 mm high (or more), shall be provided with four hinges, minimum. Doors with height up to 2500 mm shall be supplied with three stainless steel hinges, closers, latches, lever handles and locks, if specified. Lever handles shall be of ergonomic shape to prevent fouling of clothing. All hardware, hinges, locks and other fittings shall be stainless steel. Hinges shall be heavy-duty lift off butt or equal approved, to permit removal of the door leaf. Latches shall be spring mortise type, keyed or unkeyed. Door handles shall be solid with a minimum 9 mm spindle. Lock screws in spindles shall be of a type that does not need periodical re-tightening.

5.1.15 Door frames shall be installed, as appropriate, by either bolting through air tight isolation gaskets, or by a continuous fillet weld all round. Frames shall be reinforced at hinges, locks and closer device positions. Detailing shall minimize galvanic corrosion.

5.1.16 All doors shall be supplied with 2 (two) keys. The system door shall be provided with 3 (three) master keys. The doors located on corridors, escape routes and staircases shall not be fitted with lockers, other doors shall be fitted with lockers unless otherwise specified. Vision panels shall be an integral part of the certified door. The glazed area shall be approximately 200 x 400 mm (W x H). The vision panels shall not impair the function of the sliding door sealing.

5.1.17 The doors between compartments with and without air-conditioning shall be provided with thermal insulation.

5.1.18 Door stops of chrome plated brass with rubber head and catches shall be installed for all offices doors. Door stops shall be resilient, easily removable and shall be positioned so as not to present a tripping hazard especially to escaping personnel.

5.1.19 All hinged fire doors, stairway doors and doors of closed spaces (Laboratory, M-13 and M-17) leading outside shall be provided with an overhead heavy-duty hydraulic door closer. Door closers shall not obstruct the action of the doors or reduce the specified clear openings. Door closers shall not incorporate a stay open device. The frames and door leafs for all doors shall be delivered with pre-drilled holes for fixing of door closers. Suitable reinforcements shall be provided within the doors and doorframes.

5.1.20 Door leaves shall be properly reinforced at hinges, locks, handles, closer devices and any other places where hardware is to be attached to the door.

5.1.21 Doors shall be marked with stainless steel nameplate with engraved lettering colored with enamel paint. The nameplate shall be affixed 1600 mm above the floor. The nameplate shall identify the Room Number (to be assigned) and the Room Name (to be confirmed). Name plates shall be in Portuguese and English language.

5.1.22 All doors and frames shall have applied finishing compatible with the partition wall. B-15 door thresholds shall be made of 1 mm stainless steel and shall be flush with finished floor's level, except for wet areas. Stainless steel door leaf, door frame and hardware shall have the surface protected by plastic film during shipment and construction at the yard. Carbon steel scratching and grinding sparks must not contaminate any of the stainless steel surfaces. Damaged surfaces shall be chemically removed and then refinished to a bare bright surface.

Door frames shall be factory finished, standard painting (Munsell or RAL) scale, and the fixing of door hardware shall be such as not to damage any applied finishes. Door leaf surfaces shall be halogen free finishing.

5.1.23 Threshold shall be provided at wet areas. The surface shall be finished with a homogeneous skirting board with round corner. Doors shall be placed in position after the installation of wall panels. Door closers, latches and other items shall be fully adjusted and tested for proper action, and all access panels or other removable panels shall be adjusted and operated as necessary to ensure their proper performance.

5.2 B-15 Rated Doors

5.2.1 Construction and Materials

The construction of B-15 rated doors shall be as follows, unless otherwise specified:

Frames - Galvanized steel profile frames to interlock with partition wall openings, incorporating over panels in the transom where necessary. Frames shall be supplied to fit all types of bulkheads and installation methods.

Leaves - Sandwich construction, stiffened flush framed panels with facings on both sides in halogen free material surface finishing, coated galvanized steel sheets, incorporating a fully bonded core of non-combustible mineral wool insulation, and free of asbestos.

Concealed solid fixed backings shall be provided within the leaf thickness for door hardware fixing. Sound reduction value shall be compatible with the installed wall system in which the door is installed.

The door frame shall be provided with a resilient pad on three meeting faces to reduce the impact noise caused by the closing action of the door.

5.3 “A” Rated Doors

5.3.1 Construction and Materials

Concealed solid fixed backings shall be provided within the leaf thickness for fixing of door accessories. “A” class doors shall be provided with gaskets. Gasket seals shall maintain the specified integrity of the door throughout the door’s specified life time. Gaskets shall be glued or mechanically fixed in such a way that they may be easily replaced. Gaskets shall maintain the elasticity and allow for lathing and full perimeter sealing of door-leaves during continuous heavy use, without requiring excessive force or slamming. Gaskets in zone 1 classified areas doors and doors which shall maintain differential air pressure shall be selected and arranged in order to guarantee the long term sealing performance requirements. “A” class door leaf shall be made of steel plate with mineral wool core, frame made of galvanized steel profile, 3-part hinges with ball bearing and grease nipples, reinforcement for door closer, magnet and cut out for lock.

Frames - Galvanized profile steel frames to interlock with partition wall openings, incorporating over panels in the transom where necessary. Frames shall be supplied to fit all types of bulkheads and installation methods.

Leaves - Sandwich construction, stiffened flush framed panels with facings on both sides halogen free material finishing, coated galvanized steel sheets, incorporating a fully bonded core of non-combustible mineral wool insulation, and free of asbestos.

Sound insulation value shall be compatible with the installed wall system in which the door is installed.

5.4 "H" Rated Doors

5.4.1 Construction and Materials

"H" class doors shall be fully tested and certified as "H" doors in accordance with international applicable requirements and criteria. "H" rated doors shall be fitted with permanently attached means of self-closing. The "H" class doors leaf shall be stainless steel finishing 2 mm thickness and door frame 4 mm thickness.

External hinged "H" rated doors shall be suitable for offshore constructions as protection against hydrocarbon fires and explosions. The door leaf shall have reinforcement plates for hinges and door closer. The door frame shall be constructed with a profile shaped to give maximum tightness, with 3 separate areas of impact.

The frame shall be proper for bolting or welding. The hinges shall be stainless steel, bolted to the door leaf and welded to the door frame and shall be provided with washers between the top and bottom parts to reduce friction. Air and gas tightness shall be at least 0.4m³/hm² at 50 Pa, or in accordance with design directives. Lock-case shall be operated with one center mounted handle. Sound insulation value shall be compatible with the installed wall system in which the door is installed.

5.5 "J" Rated Doors

5.5.1 5.3.1 Construction and Materials

HOLD

6 WEATHERTIGHT DOORS

6.1 General

6.1.1 A closing appliance is said to be weathertight if it is capable, under any sea conditions, of preventing the penetration of water into the unit. Doors exposed to the weather and strong winds shall be robust stainless steel sliding or hinged doors. The door leaf shall be a sealed unit, totally impervious to moisture. Sliding doors shall be mounted on the outside of the walls.

6.1.2 All weathertight doors shall withstand the extreme environmental design conditions on the field location. Detailing shall prevent any water on external decks from passing through the door construction. Doors shall be of stainless steel plate, type AISI 316L, or alternatively AISI 316 with a maximum carbon content of 0.05 % and installed to avoid moisture condensation and to dampen the external noise.

6.1.3 Weathertight doors shall be installed according to the basic design as well Classification Society rules and applicable regulations. Certificates type examination (type approval certificate) shall be provided during proposal analysis phase. If there is any inconsistence between the Doors Arrangement and C.S. rules, C.S. rules shall prevail.

6.1.4 All external doors shall be at least “A-0” class as per required by item 9.2.9 of MODU Code. These doors shall be installed in order to avoid any gas leakage and shall be, as previously required, completely sealed. Weathertight doors for rooms equipped with CO2 firefighting system shall be supplied with limit switch (REED RELAY TYPE).

6.1.5 Doors or hatches within weathertight bulkheads shall be certified to meet the applicable design pressures (see applicable maritime requirements). Quick-acting doors shall be those designed to effect simultaneous closing or opening action by the operation of a single lever or hand wheel.

6.1.6 Weathertight doors’ dimensions and sills shall be confirmed during the detailed design phase, considering their use and location, also dimensions of equipment that may be transferred between compartments and outside.

6.2 General Requirements

6.2.1 Tightness

Where weather-tightness is required, weather-tight seals shall be added. The weather tightness shall be verified by hose testing from the outside after installation. No leakage shall be accepted. On floating production units and semi-submersibles, weathertight doors may be required on or above freeboard decks. In addition to the sealing requirement stated above, these doors shall be designed for a strength equivalent to or better than that required for the weather-tightness of the structure in which they are positioned.

Weathertight closing appliances are required for those external openings being submerged at least up to an angle of heel equal to the dynamic angle. This applies to any opening within 4.0m above the final waterline as well. Doors shall generally open outwards to provide additional security against impact of the sea.

Doorsill heights shall be from steel deck to clear opening door and shall be defined in accordance with ILLC (MSC 77/26/Add.1, ANNEX 3), as described on item 3.7 of MODU Code or applicable rule regarding F.P.S.O. or semi-submersible platform.

6.2.2 Opening Pressure

The opening force required to open a door, as measured with a dynamometer or similar device, shall not exceed the following limits for doors in frequent use, (major traffic, escape route doors or doors used more than 10 times a day), when these doors are in a level position:

- Hinged doors: 65 N
- Sliding Doors: 50 N

For all other doors the following limits shall not be exceeded:

- Hinged doors: 130 N
- Sliding Doors: 105 N

The maximum acceptable opening force in accidental situation shall never exceed 250 N, for doors defined as escape doors. Hinged doors leading to open areas shall be provided with a damping mechanism to prevent injuries.

6.2.3 Design

Means shall be provided to prevent closures from rattling. Locking devices shall be provided on all closures giving access to spaces or areas required to be locked. All hinged doors in emergency exits shall open outwards in the direction of the escape route and shall be easily opened from both sides by one person.

Padlocks shall be supplied for all external doors whose closing systems do not allow installation of lockers with keys. All “A” class hinged doors and emergency escape doors shall have self-closing device.

Door frames shall be installed, as appropriate, by a continuous fillet weld all around. To reduce transmission of forces from bulkhead into doorframe, which may affect proper alignment and operation of door, maximum plate buckling at perimeter of cutout shall be 5 mm along straightedge.

Any additional components, which are required to comply with fire rating, such as, exposed frame insulation covering and associated flashing, shall be provided. For a complete delivery, gaskets, screws and screw cover must be included.

All emergency doors shall be painted (internal side) with color Munsell 5R 4/14 according to NR-26. PNBV shall be consulted regarding location of these doors.

All doors and their respective frames and coamings, shall be designed and constructed to be as light as practicable, consistent with necessary strength, duty, tightness, rigidity requirements, and fire-retardant characteristics. They shall withstand, without permanent distortion, the specified proof test pressures, when applied to both sides (not simultaneously).

The rigidity of all closures shall be such as to prevent limberness, to maintain the gasket (or contact) surface in a single plane under normal service conditions, to prevent distortion and to seat the gasket. Opening devices for doors shall be sufficiently offset and be so located as to prevent injury to the hands of operating personnel. The handles finish shall be smooth, without flash or projections. All operating and securing devices for doors shall be so designed and constructed that they cannot be released by vibration. On quick-acting doors, the operating opening device shall be designed to cause no obstruction of the passage opening when the door is in the open condition. When hinged doors are designed to seat gaskets tightly around their entire periphery (by securing devices), the hinges shall be designed to prevent binding and damage to the hinges or closures in the tightening process.

Doors in structural bulkheads shall have rounded corners. Door frames in structural bulkheads shall be reinforced with a stiffening arrangement to match the door manufacturer’s requirements to prevent leakage and exceeding the allowable stresses.

6.2.4 Design Qualification Test.

Doors are required to be qualified by the Naval Technical Authority. Each weathertight door shall be tested in accordance with the following requirements:

6.2.4.1 After installation onboard all weathertight doors shall be hose tested, the door shall not permanently deform. The water pressure shall be at least 0.2 mm^2 (2 bar), and the nozzle shall beheld at a distance of maximum 1.5 m from the door or hatch cover.

6.2.4.2 Doors shall be tested in order to verify compliance with design tightness pressure. No adjustment or repairs are allowed during the test. At the completion of the test no parts shall require replacement, repair or adjustment. The door shall be re-hydrostatically tested following the cycle testing and qualify only if the hydrostatic test is successful.

6.2.4.3 Doors shall be fire tested to meet the requirements of the bulkhead in which they shall be installed.

6.2.5 Fixed Lights (Windows)

All weathertight doors, if specified, shall be designed to have the ability to incorporate a fixed light in the panel if specified. Fixed lights in weathertight doors shall be of sufficient strength to maintain the damage control strength requirements and resistance to damage features of the door in which it is installed. Fixed lights for doors facing the process plant shall be of heat-treated and shatterproof glass.

6.2.6 Technical Documentation

Drawings shall be provided for each type of door. The drawings shall provide the necessary design, engineering, manufacturing, and quality assurance requirements information necessary to enable the procurement or manufacture of an interchangeable item or end product that duplicates the physical and performance characteristics of the original product, without additional design engineering effort or recourse to the original design activity.

6.2.7 Materials

All external doors shall be of stainless steel plate, type AISI 316L, or alternatively AISI 316 with a maximum carbon content of 0.05 %. Door leaves shall be built for minimum repair requirements.

Doors shall be supplied with temporary preservation resistant to welding spatter and angle grinding grit. The door surface finish, after preservation removal, shall be stain resistant and require minimum maintenance. A procedure for stain removal (without dismantling the door) shall be provided.

All door leaves shall be fully insulated without any air pockets. Insulation fibers shall be sealed to prevent any fibers being released to the environment, and totally impervious to moisture. External stainless steel surfaces shall be blast cleaned with fine grade of aluminum silicate. Internal stainless steel surface shall be brushed finish, unless otherwise specified.

6.2.8 Acoustic requirements

Doors shall have, as a minimum, the same sound reduction requirement as the wall they are installed in, unless it can be documented that a lower value is acceptable, in order to meet the Rw value of complete wall/door assembly. The sound measurement test method shall be in accordance with ISO 140/3.

6.3 Hinged doors

6.3.1 All weathertight “A” class hinged doors and active leaf of all hinged double doors shall be self-closing, self-latching and central release (quick-acting type).

6.3.2 Doors shall be provided with three hinges, minimum. The hinge design shall allow for easy removal of the door. All hardware, hinges, locks, hooks and similar fittings shall be of AISI 316 L stainless steel or alternatively AISI 316 with a maximum carbon content of 0.05 %.

6.3.3 The door leaf or the gasket shall be easily adjustable after the door has been installed to ensure proper closure and compression of seals when closed.

6.4 Removable panels

6.4.1 Removable panels shall be installed where the doors alone do not provide enough space for passage of equipment for handling or maintenance.

6.4.2 Removable panels shall be certified to have the same fire rating as the bulkheads they are installed on.

6.4.3 Location and dimensions shall be confirmed in the detailed design phase and shall be compatible with cargo handling, without obstacles.

7 PASSIVE FIRE PROTECTION (PFP) AND THERMAL/ACOUSTIC INSULATION

7.1 Passive Fire Protection (PFP)

7.1.1 Passive Fire Protection (PFP) shall be applied on bulkheads, doors, windows, and penetrations, in accordance with applicable rules and regulations of IMO MODU CODE and SOLAS (1974 and amendments). All insulating materials shall be of non-combustible material and water repellent, and shall be suitable for the marine environment and the context in which they will be used. The materials shall not be corrosive to metal or emit any toxic gases or harmful dust. Bulkheads and decks that are to be insulated shall be provided with fixing pins and washers to retain the insulating material. The pins shall be welded to the structural material, e.g. steel surface.

7.1.2 Due to safety concerns, all insulation shall be faced, so as to minimize the release of any fibers. All cut and exposed edges shall be sealed.

7.1.3 The effect of fire protection shall be considered in the acoustical treatment. PFP and acoustical insulation may be considered as contributing to the thermal insulation.

7.1.4 The required thicknesses and reinforcement systems on the basis of the fire protection requirements shall be provided. PFP material thicknesses shall always be supported by the approval of an authority certification (e.g. by Classification Society).

7.1.5 All aspects of PFP material design, including manufacture and installation shall be in accordance with the latest editions of applicable codes and standards issued by internationally recognized organizations, associations and regulatory bodies, including, but not limited to, ISO International Standards Organization

SOLAS Inter-Governmental Maritime Consultative Organization (IMCO), International Convention for the Safety of Life at Sea (SOLAS) 1974, including 1986 Amendments and (1996) Consolidated Edition. Also, material shall be in accordance with C.S rules.

7.1.6 Costs and maintenance requirements shall be considered as main factors in the evaluation of different PFP systems. The manufacturer shall provide information on the expected total service life costs of the proposed system, including topcoat replacement. Such data shall include experience gained to date in similar offshore installation conditions.

7.1.7 Passive protection shall guarantee to limit the temperature on the unexposed side to a level where personnel are safe or below the combustion temperature of combustible materials. It shall limit the stress levels in structural steel to a temperature where its load-bearing ability is not compromised. The Passive Fire Protection system shall be designed for the purpose of maintaining structural stability and integrity of all primary steel members for a defined period of time when exposed to a hydrocarbon fire. Fire protection performance shall be based on the ability of a minimum thickness of PFP material to restrict the rate at which heat is transmitted to the protected element. The criteria for the fire performance of the system shall be the acceptable steel temperature at the end of the fire exposure period to avoid collapse.

7.1.8 All PFP systems shall be tested at a recognized independent establishment to standard fire tests to classes A/B and to hydrocarbon fire test to class H. Suitable certification shall be available from approval authorities such as classification society to support all the fire protection requirements of the project.

7.1.9 The fireproofing material supplied for the project shall be manufactured using the same formulation as the material that has been subjected to hydrocarbon/fire tests by a recognized independent third party. Special attention shall be paid to the junction between the steel deck and insulation in order to avoid water penetration.

7.1.10 The PFP system shall be able to maintain fire performance over the service life of the installation. In this regard, the proposed PFP system's ability to satisfy the following requirements:

- Resistance to weather cycling in offshore environments (corrosion resistance);
- Impermeability (corrosion and mechanical resistance);
- Resistance to flexing and vibration of the substrate (adhesion);
- Chemical resistance to products liable to pollute it (hydrocarbons typical to oil and gas installations);
- Mechanical shock (impact) resistance;
- Abrasion and erosion resistance;
- Resistance to wash down by high pressure water jets and typical cleaning agents;
- Resistance to substrate temperature cycling during construction and operation;

7.1.11 Flexible type fireproofing shall have a finishing/protection suitable to the environment conditions in which it will be installed. Exposed fire insulated bulkheads in compartments where the movement of equipment or part is possible shall be covered with aluminum plate from the floor to the ceiling until 3.00m. The aluminum plate shall be perforated in noisy environment. Galvanic corrosion shall be avoided. Isolation shall be provided between aluminum plate and metallic pieces. Exposed deck thermal/acoustic insulation shall be covered with glass cloth. Blanket and plate fixations shall follow suppliers' recommendations.

7.1.12 All external cladding, if applicable, covering A- and H-rated insulation shall have fire rated gaskets between cladding and fixing brackets to maintain fire rating of the overall installation. Cladding covering thermal insulation shall have isolation gaskets between cladding and fixing brackets to avoid migration of condensation. The clad covering shall be installed in order to protect flexible material insulation, if exposed to the weather.

7.1.13 Special attention shall be paid to the junction between the steel deck/bulkhead and insulation in order to avoid water penetration.

7.1.14 The fireproofing material shall be asbestos free.

7.1.15 The bulkheads, exposed ceilings and floors where required by the HVAC discipline, shall be provided with a thermal insulation according to I-ET-3010.1M-5250-300-P4X-001 - HVAC SYSTEM DESIGN.

7.1.16 "H" class insulation can be intumescent fire protection coating, high performance reinforced epoxy, solvents free. Thickness shall be in accordance with manufacturer instructions. "H" class insulation shall be able to protect the structure and bulkheads against hydrocarbon fire, preserving its integrity during the specified time.

7.1.17 Stairway and lift trunk shall be enclosed by "A" class walls and be protected by self-closing "A" class doors at all decks, in order to avoid fire spreading from one deck to another.

7.1.18 Draught Stops shall be installed above ceiling, in order to avoid fire spreading.

7.1.19 At the intersection between a higher class division and another one with lesser degree of protection, an extended fireproofing is to be provided to a distance of at least 1.0 meter beyond the intersection. See I-ET-3010.00-5400-433-P4X-001 – PASSIVE FIRE PROTECTION.

7.1.20 Rigid type fireproofing applied by means of spray system shall not be used on ceiling / bulkheads of closed in areas. See I-ET-3010.00-5400-433-P4X-001 – PASSIVE FIRE PROTECTION.

7.1.21 Passive Fire Protection purpose shall provide the unit with the required fire safety levels, aiming to:

- Minimize the action of fire, restraining it to its origin;
- Protect human life;
- Protect equipment and systems, mainly those essential to the safe operation of the unit;

- Safeguard the unit's structural elements, in such a way as to preserve the designed structure's mechanical strength.

7.1.22 Typical insulation details shall as far as practicable be standardized throughout the installation, and shall be reflected in the wall type/deck type details and schedules. Details showing fire insulation with specific fire direction identified shall be provided.

7.1.23 Insulation details shall be suitably referenced on project documentation so that they may be used for verification of installed insulation as part of mechanical completion activities, and for repair work or modification during later phases.

7.1.24 The following issues shall be considered for determination of the type and degree of the Passive Fire Protection:

- Evaluation of the equipment layout and division of the unit into risk areas;
- Indication of the type of protection, with its respective classification, for each implementation area;
- Indication of the direction of the fire acting against shields;

7.1.25 Passive Fire Protection (PFP) for structural elements shall be in accordance with document I-ET-3010.00-5400-433-P4X-001 – PASSIVE FIRE PROTECTION.

7.2 Thermal Acoustic Insulation

7.2.1 The insulated floors, ceilings and bulkheads shall be of an approved type and shall be of non-combustible material. The insulation material shall be laid in such a way that condensation and noise is avoided and shall be securely fastened.

7.2.2 The insulation shall be flexible type.

7.2.3 Sound absorbing cassettes may be mounted to bulkheads, walls, ceilings and underside of decks in areas where additional absorption of sound is required. Sound absorption data for the cassettes shall be provided from a recognized acoustic laboratory. The cassettes shall have good sound absorption properties in the 63 Hz to 4 000 Hz frequency range.

7.2.4 The acoustic insulation shall be selected and detailed to achieve the sound absorption and sound reduction requirements specified in the project documentation. The insulation shall follow the NRC (Noise Reduction Coefficient) recommended by the requirements of the noise prediction study.

7.2.5 Exposed bulkheads thermal/acoustic insulation shall be covered with aluminum plate from the floor to the ceiling or until 3000 mm in order to be protected against mechanical shocks. The aluminum plate shall be perforated in noisy environment. Galvanic corrosion shall be avoided. Isolation shall be provided between aluminum plate and metallic pieces. Exposed deck thermal acoustic insulation shall be covered with glass cloth. Blanket and plate fixations shall follow manufacture recommendations.

7.2.6 Special attention shall be paid to the junction between the steel deck and insulation in order to avoid water penetration.

7.2.7 Thermal insulation shall be applied on the boundary surfaces of all conditioned spaces or unconditioned spaces exposed to the weather.

7.2.8 All aspects of thermo-acoustic insulation material design, including manufacture and installation shall be in accordance with the latest editions of applicable codes and standards. Also, material shall be in accordance to C.S rules.

7.3 "A" Class Bulkhead and Deck

7.3.1 Divisions formed by decks and bulkheads which comply with:

- They shall be constructed of steel or other equivalent material;
- They shall be suitably stiffened;
- They shall be so constructed as to be capable of preventing the passage of smoke and flame to the end of the one-hour standard fire test.
- They shall be insulated with materials so that if either face is exposed, the average temperature of the unexposed side will not rise more than 140ºC above the original temperature, nor will the temperature at any one point, including any joint, rise more than 180ºC above the original temperature, within the time listed below:

CLASS	MINUTES
A-60	60
A-30	30
A-15	15
A-0	0

7.3.2 Acceptable test procedure: IMO Resolution A. 754 (18).

7.3.3 Joints and reinforcements shall receive continuous welding to guarantee perfect tightness. Class A horizontal and vertical bulkheads shall be comprised of aluminum plate supports, duly reinforced and installed to assure gas and smoke impenetrability.

7.4 "B" Class Bulkhead

7.4.1 Divisions formed by decks, bulkheads, ceiling or linings which comply with the following:

- They shall be so constructed as to be capable of preventing the passage of flame to the end of the first half-hour standard fire test;
- They shall have an insulation value so that if either face is exposed, the average temperature of the unexposed side will not rise more than 140ºC above the original temperature, nor will the temperature at any one point, including any joint, rise more than 225ºC above the original temperature, within the time listed below:

CLASS	MINUTES
B-15	15
B-0	0

7.4.2 Acceptable test procedure: IMO Resolution A. 754 (18)

7.5 H-120 Class Bulkhead

7.5.1 Those divisions formed by decks and bulkheads which comply with the following:

- They shall be constructed of steel or other equivalent material;
- They shall be suitably stiffened;
- They shall be so constructed as to be capable of preventing the passage of smoke and flame after 120 minutes exposure to a hydrocarbon fire test;
- They shall be so insulated that, if the designated exposure face(s) is (are) exposed to the hydrocarbon fire test for 2 hours, the average temperature of the unexposed face will not increase at any time during the test by more than 140ºC above the original temperature, nor shall the temperature at any point of the face, including any joint, rise more than 180ºC above the original temperature, within 2 hours.
- Structures intended to be load bearing should either be tested under representative conditions of loading and restraint or have the temperature of the load bearing medium monitored during the test to demonstrate that the maximum temperature reached would not have resulted in loss of strength or stiffness or excessive expansion such as to impair the load bearing capacity.

7.6 H-60 Class Bulkhead

7.6.1 Those divisions formed by decks and bulkheads which comply with the following:

- They shall be constructed of steel or other equivalent material;
- They shall be suitably stiffened;
- They shall be so constructed as to be capable of preventing the passage of smoke and flame after 120 minutes exposure to a hydrocarbon fire test;
- They shall be so insulated that, if the designated exposure face(s) is (are) exposed to the hydrocarbon fire test for 1 hour, the average temperature of the unexposed face will not increase at any time during the test by more than140ºC above the original temperature, nor shall the temperature at any point of the face, including any joint, rise more than 180ºC above the original temperature, within 1 hour;
- Structures intended to be load bearing should either be tested under representative conditions of loading and restraint or have the temperature of the load bearing medium monitored during the test to demonstrate that the maximum temperature reached would not have resulted in loss of strength or stiffness or excessive expansion such as to impair the load bearing capacity.

7.7 H-0 Class Bulkhead

7.7.1 Those divisions formed by decks and bulkheads which comply with the following:

- They shall be constructed of steel or other equivalent material;
- They shall be suitably stiffened;
- They shall be so constructed as to be capable of preventing the passage of smoke and flame after 120 minutes exposure to a hydrocarbon fire test;
- Structures intended to be load bearing should either be tested under representative conditions of loading and restraint or have the temperature of the load bearing medium monitored during the test to demonstrate that the

maximum temperature reached would not have resulted in loss of strength or stiffness or excessive expansion such as to impair the load bearing capacity.

7.7.2 Fire Resistance Rating for load bearing structural elements is:

The ability of the structural element to withstand the effects of a defined fire (e.g. hydrocarbon time-temperature profile) for a specified time without loss of the fire separating and load bearing function of divisions and without loss of the load bearing function of structural members.

7.7.3 The Fire Resistance Rating for load bearing elements is determined on the basis of the factors listed below:

- The structural element being considered;
- The required duration of the load bearing ability;
- The fire load (or heat flux in kw/m²);
- The restricted critical core temperature.

7.7.4 Every load bearing member shall be suitably fire protected to meet the requirements of the fire resistance rating.

7.8 J-60 Class Bulkhead

7.8.1 Those divisions formed by decks and bulkheads which comply with the following:

HOLD

7.9 J-0 Class Bulkhead

7.9.1 Those divisions formed by decks and bulkheads which comply with the following:

HOLD

7.10 Delivery, Storage, Handling and Disposal

7.10.1 All PFP materials shall be delivered in original, sealed containers and shall be inspected for integrity.

7.10.2 PFP materials shall be stored in strict accordance with the manufacturer's instructions. Waste should be kept to a minimum and any left over material should be allowed to cure before being disposed of in accordance with local and/or national regulations.

8 FLOOR COVERING SYSTEM

8.1 General

8.1.1 All floor materials finishing shall be selected in order to comply with the conditions and functional requirements of each room/area. They shall be easy to maintain and clean. Materials, adhesives, sealing mastics, leveling screed, etc. shall be compatible and shall not emit toxic gases and dust.

8.1.2 The use of combustible materials in Laboratory, M-17 & M-13 must comply with SOLAS, Chapter II-2, Part B, Regulations 5 (Fire growth potential) and 6 (Smoke generation potential and toxicity). Combustible or toxic material shall not be used.

8.1.3 Catalogues shall be provided with technical characteristics, applicable test reports and standard floor colors and submitted to PNBV approval.

8.1.4 Deck compound shall be installed after steel decks have been thoroughly cleaned, dried and painted with primer to prevent corrosion and obtain good adhesion. In rooms with gullies, the covering shall be inclined towards these, to obtain proper drainage.

8.1.5 All floor covering system material shall be provided in order to comply with noise and vibration analysis report developed in the detailed design phase based on I-ET-3010.1M-1200-300-P4X-001 – NOISE CONTROL REQUIREMENTS FOR TOPSIDE.

Notes:

a. Manufacturer updated information shall be considered during the detailed design phase and proposal analysis. Floor covering system properties and characteristics shall be maintained.

b. Equivalent material is accepted provided the material properties are suitable to fulfill the noise prediction and the floor covering characteristics required for each area.

8.1.6 The following top floor coverings shall be installed according to Basic Design drawings:

- Anti-acid ceramic tiles;
- Elevated floor systems;
- Rubber tiles or sheet (antistatic/non-conductive type);
- Wooden Deck;
- FRP grating (external use);
- Floor grating (internal use);
- Painted Steel Deck (anti-skidding).

8.2 Primary Deck Covering

8.2.1 The primary deck shall be installed on interior deck areas, to level the surface prior to the application of deck finishing materials such as: tiles, rubber or painting, only in combination with a top leveling product.

8.2.2 Primary deck covering shall be used as a self-leveling for deck, (proper for wet and/or dry area) before applying finishing materials such as rubber sheets, monolithic finishing (epoxy painting) or ceramic tiles (resistant to H2SO4).

8.2.3 The primary deck covering shall be selected according to required properties of each deck area to be covered:

- Fire-retardant;
- Self-leveling;

- Lightweight;
- Thermal insulation;
- Fast drying.

8.2.4 The primary deck shall be one component mortar, based on polymer modified mortar, flame resistance, flexible and able to provide a perfect flooring installation avoiding cracks and water penetration between joints. The primary covering and the top leveling product must have high resistance to the deformations that the steel deck is submitted (bending, compression and traction), without the use of wire mash and clamps.

8.2.5 The primary deck covering shall be manufactured in accordance with ISO 9001 / 14001 quality assurance.

8.2.6 Floating floor maybe required to be integrated to the floor systems in order to minimize airborne noise. The detailed design shall follow the noise prediction study and provide the insulation if required so.

8.3 Anti-Acid Ceramic Tiles

8.3.1 The anti-acid ceramic tiles and correspondent skirting board shall be industrial type, chemical (H_2SO_4) and abrasive resistant, with high mechanical strength against impacts and protection against corrosion by aggressive substances, in light gray color.

8.3.2 Joints between tiles shall be compatible with anti-acid ceramic, chemical and abrasive resistant and anticorrosive of high resistance. Distance between tiles (joints) shall be 6 to 10 mm.

8.3.3 The deck compound shall be proper to anti-acid ceramic tile's installation and shall be provided in accordance with manufacturer's instructions.

8.3.4 Anti-acid ceramic tiles shall be installed in Battery Rooms (M-17), as indicated in the document I-ET-3010.00-5140-700-P4X-001 – SPECIFICATION FOR ELECTRICAL DESIGN FOR OFFSHORE UNITS, item 3.13.8: "Electric batteries rooms shall have acid resistant floor".

8.3.5 Anti-acid ceramic tiles shall be installed in Laboratory (Equipment area and Office). The joints between tiles shall be made of impermeable material, so as to avoid chemical products penetration.

8.4 Elevated Floor Systems

8.4.1 The elevated floor system shall be proper to be installed where electrical panels will be installed.

8.4.2 The elevated floor shall have features that make services easily accessible and shall provide quick access to the power and cabling that lies below the floor. It shall result in faster installations and increased performance.

8.4.3 The elevated floor system shall have the following characteristics:

- Heavy duty type.
- Epoxy paint finishing.
- Interchangeable with other panel strengths.

- Non-combustible.
- Grounding and electrical continuity.
- Class A flame spread and smoke development rating.
- Lightweight.

8.4.4 Elevated floor characteristics (heights, capacities) shall be adequate to requirements of each room where the system will be installed.

8.4.5 The system indicated in this document represents the minimum requirements to be considered and shall be confirmed in the detailed design phase, according to the cargo handling design – document I-ET-3010.1M-5266-630-P4X-001 – Topside Mechanical Handling Procedures.

8.4.6 Elevated floor system shall be installed in Generator Control Panels Room (M-13) and Topside Normal Panels Room 1 (M-17), with painting finishing on both areas.

8.4.7 <u>Performance Requirements:</u>

- Pedestals:
  a. Axial Load: Pedestal assembly shall sustain around 2200 kg (minimum) axial load without permanent deformation.
  b. Overturning Moment: Pedestal assembly shall provide an average overturning moment around 450 kg (minimum).
- Stringers:
  a. Midspan Concentrated Load: Stringer shall be capable of withstanding a concentrated load around 200 kg (minimum).
- Floor Panels:
  a. Concentrated Load: Panel shall be capable of supporting a concentrated load of 567 kg (minimum) placed on a one square inch area, at any location on the panel.
  b. Flammability: System shall meet Class A Flame spread requirements for flame spread and smoke development. Tests shall be performed in accordance with ASTM-E84-1998, Standard Test Method for Surface Burning Characteristics for Building Materials.
  c. Combustibility: Access floor panels shall qualify as noncombustible by demonstrating compliance with requirements of ASTM E 136, Standard Test Method for Behavior of Materials in a Vertical Tube Furnace at 750°C.

8.4.8 <u>Design Requirements:</u>

- Access floor system: where indicated on the design documents, shall consist of modular and removable all steel panels and supported on all four edges by structural steel members which are designed to bolt onto adjustable height pedestal assemblies forming a modular grid pattern.
- Panels shall be easily removed by one person with a lifting device and shall be interchangeable except where cut for special conditions.

- Quantities, finished floor heights and location of accessories shall be as specified on the detailed design drawings.

Panel Components:

Floor Panels:

- Shall consist of a top steel sheet welded to a formed steel bottom pan. Mechanical or adhesive methods for attachment of the steel top and bottom sheets shall not be used.
- Panels shall have an electrically conductive epoxy paint finishing.

8.5 Rubber Tiles or Sheet (antistatic/non-conductive type)

8.5.1 High and low-voltage electrical control panels rooms shall have *non-conductive/antistatic flooring*. The rubber finishing shall comply with the following requirements:

- Type II – ABC (ozone, fire and oil resistant) and minimum Class 0 (tested for 5kv) for panels with rated voltage up to 690V and minimum Class 1 (tested for 10 kv)for panels with rated voltage above 690V, according to ASTM D-178-01 requirements;
- Halogen free;
- Smoke density test and toxicity according to ISO 5659, part 2 and IMO Res. MSC 61(67);
- Heavy traffic.

8.5.2 The rubber flooring shall be installed in front and behind electrical panels and shall provide staff safety when working on live voltages. The arrangement shall avoid islands without rubber flooring, to make it easy the handling of movable equipment over the floor.

8.5.3 The rubber sheet shall be installed above steel deck, elevated floor or primary deck/ light weight self-leveling compound, according to indicated on Arrangement drawings.

8.5.4 The rubber tiles (antistatic/non-conductive type – Class 1) shall be installed in Topside Normal Panels Rooms 1 and 2 (M-17), around the electrical panels.

8.5.5 The rubber floor (antistatic/non-conductive type – Class 0) shall be installed in AEPR (M-17), throughout the whole compartment area, over the Floating Floor.

8.6 Wooden Deck

8.6.1 Wooden shock-protection pads shall be provided for all compartments and/or areas where cargo handling is required. For these areas, the wooden shock-protection pads design shall be proper to resist against heavy loads and impact.

8.6.2 The wooden deck shall be made of hard wood suitable for cargo handling area, and shall be certified by a state environment agency. The design shall allow its use in appropriate terms of safety and maintenance.

8.6.3 The wooden decks, which are exposed to the weather, shall be protected with naval varnish.

8.6.4 The wooden deck shall be applied in:

- Pull-in area (see document I-DE-3010.1M-1352-140-P4X-016 – Pull-in Structure);
- Laydown Area (see document I-DE-3010.1M-1352-140-P4X-018 – Laydown Area Structure (AFT));
- M-14 Laydown area (see document I-DE-3010.1M-1425-140-P4X-001 - M-14 - Chemical Units and Products Storage - Main Structure – Plans);
- M-16 Laydown Area (see document I-DE-3010.1M-1427-140-P4X-001 - M-16 - Laydown Area - Main Structure - Plan and Sections);
- M-16B Laydown Area (see document I-DE-3010.1M-1427-140-P4X-011 - M-16B - Laydown Area - Main Structure - Plan and Sections).

8.6.5 In Pull-in area, the wooden deck shall prevent from wear and tear that may be caused by the winch.

8.7 FRP Grating (external use)

8.7.1 FRP gratings shall be installed on external spaces where the leveling of the floor shall be increased to the threshold height in order to provide an easy transit of wheeled cars and cargo handling devices and walkway external area.

8.7.2 FRP gratings have a slight resiliency that makes them comfortable to stand on for long periods. The pultruded section shall be corrosion resistant, slip resistant, light weight, high strength-to-weight ratio, non-conductive, non-magnetic, fire retardant, impact resistant and low maintenance. Pultruded grating shall be assembled in “H” sections linked by rod per distance into panel.

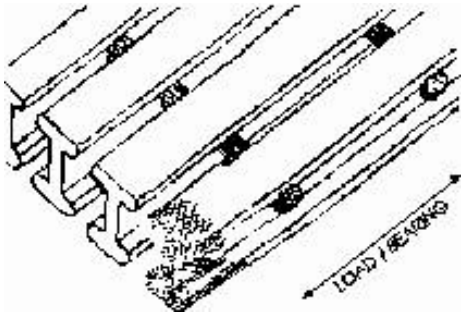

8.7.3 For specification, refer to I-ET-3010.00-1352-130-P4X-001 - SPECIFICATIONS FOR FLOOR GRATINGS, TRAY SYSTEMS AND GUARDRAILS MADE OF COMPOSITE MATERIALS.

8.8 Floor Grating (internal use)

8.8.1 Floor gratings shall be installed on internal spaces where the leveling of the floor shall be increased to the threshold height in order to provide an easy transit of wheeled cars and cargo handling devices and walkway from external area.

8.8.2 Floor gratings made of fiberglass shall not be installed in closed areas.

8.8.3 Floor grating shall be made of stainless steel or aluminum, with adequate spacing between the parts to make easier its maintenance and passage of workers and trolleys.

8.8.4 Floor grating shall be insulated to prevent corrosion.

8.8.5 Floor grating shall be installed in Laboratory (Emergency shower area).

8.9 Painted Steel deck (anti-skidding)

8.9.1 Painted steel deck shall be anti-skidding, high abrasion resistance and high mechanical resistance.

8.9.2 For specification, refer to I-ET-3010.00-1200-956-P4X-002 – GENERAL PAINTING.

8.9.3 Painted steel deck (anti-skidding) shall be used in Generator Control Panels Room (M-13), Generator Power Panels Room (M-13), Gen. HVAC Room (M-13); Topside Normal Panels Rooms (M-17), Topside Normal Transformer Room (M-17), Topside HVAC Room (M-17) and CO2 Central Room (M-17).

9 FIRE RATED WINDOWS

9.1 General

9.1.1 Fire rated windows shall be at least “A” Class, certified to have the same fire rating as the wall they are installed in, non-opening type, designed to be welded on steel bulkheads. The window units shall consist of a 6 mm (minimum) main frame, a sealed condensation free glass panel, a fixing frame (made of stainless steel) and an adjustable internal frame. Gasket between steel bulkhead and outer frame shall be provided.

9.1.2 The window system shall include a telescopic internal frame for accurate and flexible installation. The windows boxes shall be insulated and made of reinforced polyester, or galvanized steel painted.

9.1.3 The windows shall have type approval according to IMO Resolution A754 (18) based upon fire test against the toughened safety glass. The windows shall have toughened safety glass dimensioned as per ISO 21005 and ISO 1095 (sidescuttles) and shall have mechanical strength as required by ISO 3903 and ISO 1751 (sidescuttles).

9.1.4 The distance from steel deck to the window center shall be 1600 mm.

9.1.5 For dimensions and class of Laboratory’s windows refer to document I-DE-3010.1M-8222-190-P4X-003 - LABORATORY - DOORS AND INSULATION PLAN. Characteristics shall be confirmed in the detailed design phase.

9.2 Sound Characteristics

9.2.1 The windows shall as far as possible be soft connected to the steel structure and treated with structure borne noise damping material.

Sound reduction:

- Lab tested up to Rw = 53 dB
- Tested on platform Rw = 60 dB

9.2.2 All material construction shall be provided in order to comply with noise and vibration analysis report developed in the detailed design phase.

9.2.3 The noise of Laboratory shall be in accordance with I-ET-3010.1M-1200-300-P4X-001 – NOISE CONTROL REQUIREMENTS FOR TOPSIDE.

10 FURNITURE

10.1 General

10.1.1 An expert architecture company to be approved by PNBV shall carry out the complete design and materials specification. Furniture materials shall be provided in accordance with IMO FTP Code.

10.1.2 Materials finishing shall comply with the requirements stated on FTP code. All materials shall be flame retardant.

10.1.3 Manufacturer shall provide the following type approval and fire test procedures:

- IMO-testing (marine):
- IMO MSC. 61(67), Annex 1, Part 5 and 6, IMO Res A.653 (16), IMO Res A.687 (17): Spread of flame;
- IMO MSC. 61(67), Annex 1, Part 2, ISO 5659-2 med FTIR: Analysis, Smoke and toxicity;
- IMO Resolution MSC. 61 (67), Annex 1, Part 1: Non-combustible;
- IMO A.471 (XII) amended by IMO Res A.563 (14): Resistance to flame of vertically supported textiles and films;
- IMO MSC. 61(67), Annex 1, Part 8, IMO Res A.652 (16): Ignitability of upholstered furniture;

10.2 Furniture Characteristics:

10.2.1 All furniture shall be built of plywood (naval type) covered with fire retardant melamine laminate, unless otherwise specified. All accessories shall be stainless steel made.

10.2.2 All furniture with doors and/or drawers shall be supplied with 4 keys, at least.

10.2.3 Office workstations shall be designed in order to achieve maximum users comfort. All the workstations shall be provided with trays or ducts for cable routing and free surface for large screens. The workstations shall be supplied according to standards specialized manufacturer (industrial production), with items that are in compliance to ergonomics requirements (**Refer to NR-17**). As a result, the design may be as simple as possible and fit the worst case of physical dimension and environmental conditions for offshore ambient.

10.2.4 Workstations layout should provide an adequate place for all equipment and materials that the users must have at hand during their activities. The working environment shall enable computer users to avoid improper working postures. The use of computers require the possibility of adjustments, posture changes during the work shift and organization of work area involving chair, keyboard, mouse, monitor, phone, etc.

10.2.5 For Ergonomic aspects, refer to item 13 of this document.

10.2.6 <u>The following aspects for computer desk and/or workstations shall attended:</u>

- Allow assembly of the working surfaces in a range of 540 mm to 780 mm.
- It is required that the computer workstation has height of 750 mm.
- The plywood of workstations shall be industrial type, incorporating the melamine finishing without the need to use glue or similar materials. The workstations edges shall be directly impressed on working surface.
- Have adequate work space on the working surface so that the user has the frequently used work accessories within reach without getting into stressful posture.
- Have sufficient clearance under the desk for free movement of user's knees & legs and to get close enough to the input devices.
- Have trays or ducts for cabling route.
- Have a hard trimming around working surface, industrial type, round corners. Square corners shall not be used.
- Partitions 1400 mm height shall be provided between workstations. These partitions, if specified, shall be part of the workstation system and able to support shelves for documents and material storage.

10.2.7 <u>The following aspects for chairs shall be attended:</u>

- Have good back rest preferably with lumbar support and seat pan should be wedge shaped.
- Have height adjustability.
- Have five supporting points for better stability (except no wheeled chair).
- The chairs wheels shall have to be adequately specified to the type of floor and use of the chairs.
- Use of footrest is recommended to get full support to the user's legs.
- No wheeled chairs, which are not required to be turning type, shall have four feet.
- For more details, see Ergonomic requirements listed on item 13.2 – Work Chairs.

10.2.8 <u>The following aspects for monitors shall be attended:</u>

- Position the Monitor in front of the user usually at arm's reach between 45cm (18”) and 61cm (24").
- Position lights in relation to Monitor so as to avoid direct glare.
- The top of the screen should be at the same height as seated eye level.
- Monitor arm or support shall provide optimal position to ensure a relaxed head and neck posture. This item shall be provided for all workstations due to drilling unit movement.

10.2.9 <u>The following aspects for keyboards shall be attended:</u>

- The computer keyboard should be about as high as the elbow and in front of the user.
- The keyboard should allow the user to rest fingers on the middle row of keys and maintain a straight (neutral) wrist posture.
- The keyboard tray should allow the user to adjust the angle of the surface so that the user's wrists and elbows can be in neutral or slightly downward position during keying.

10.2.10 The following aspects for mouse shall be attended:

- Elbows should be close to the body and bent at an angle around 90 degrees with straight wrists while holding the mouse.
- The user should not be reaching out with a straight arm forward or to the side while using the mouse.

10.2.11 The following aspects for telephones shall be attended:

- Use of Headset shall be evaluated during the detailed design phase and adopted whenever the operator tasks analysis suggests so.

10.2.12 The following aspects for furniture (in general) shall be observed and implemented:

- Writing desks shall have reading lights (fluorescent type).
- Bookshelves and sideboards shall have adjustable bars against roll.
- Textiles and upholstery shall be of flame retarding type according to Authorities requirements.

Equipment, benches and material finishing for industrial/service areas shall be compatible with the use and functionality of work activity. The design of these benches shall be developed considering the comfort of its users and be provided with facilities for material storage (shelving, drawers, etc.).The dimension of the benches shall follow the basic design. Ergonomic evaluation shall be developed in order to guarantee the work organization.

11 LABORATORY

11.1 General

The Laboratory shall be provided with one office and equipment area which shall be sized in accordance with the basic arrangement drawing.

The Laboratory container shall be provided complete with Electrical, Instrumentation, Telecom, Hydraulic, equipment, furniture, insulation, partition wall, ceiling, linings, floor, external/ internal doors, hoods, HVAC system installation and all interfaces required for perfect operation. All systems must be tested and functioning.

Laboratory clearance shall be confirmed and adjusted in the detailed design phase and the free height shall be, at least, 3000 mm according to basic design.

Elevations from the Laboratory container shall be confirmed in the detailed design phase. For level difference, a mean of access shall be installed in the entrances to guarantee comfort and attend to ergonomic requirements.

11.2 Characteristics

The following requirements shall be followed for Laboratory design:

11.2.1 The laboratory project shall be appropriate in order to guarantee the accomplishment of the necessary analysis.

11.2.2 The equipment area shall be separated from the office by partition with door.

11.2.3 All glasses used in furniture and partitions shall be laminated type in order to avoid shattering.

11.2.4 Floor finishing shall be anti-acid ceramic tiles. The joints between tiles shall be made of impermeable material in order to avoid chemical products penetration.

11.2.5 Telephone, audio and net connections facilities shall be provided for laboratory and office. For Telecom equipment, refer to:

- I-DE-3010.1M-5510-760-PPT-014 - TOPSIDE M-14 MODULE TELECOMMUNICATIONS SYSTEMS ARRANGEMENT;
- I-DE-3010.1M-5510-762-PPT-010 - TOPSIDE UHF ACTIVE REPEATER ONE LINE DIAGRAM;
- I-DE-3010.1M-5510-764-PPT-002 - TOPSIDE TELEPHONY ONE LINE DIAGRAM;
- I-DE-3010.1M-5510-767-PPT-002 TOPSIDE PUBLIC ADDRESS (PAGA) ONE LINE DIAGRAM;
- I-DE-3010.1M-5510-768-PPT-003 TOPSIDE STRUCTURED CABLING ONE LINE DIAGRAM.

11.2.6 Laboratory furniture shall be supplied by a specialized manufacturer (industrial type) and all dimensions shall be defined according to Ergonomic studies to be carried out in the Detail Design Phase.

11.2.7 All furniture shall be made of naval plywood covered with fire retardant melamine laminate, unless otherwise specified.

11.2.8 All benches for the laboratory shall be custom made, by a specialized company, with drawers, shelves and/or doors. The doors for wall cabinets shall have laminated glass finishing.

11.2.9 Fitting devices shall be provided for furniture and equipment. Lockers, chairs, desks and furniture to be permanently, and located at the same place shall have means to be fixed on the floor/wall, considering that this is a FPSO unit.

11.2.10 Organic and Inorganic benches shall have top in polypropylene.

11.2.11 Benches with sink shall be provided with closet with drawers, shelves and doors in order to store glasses.

11.2.12 All benches shall be provided in order to allow its users to seat and rest the feet according to indicated on layout drawings.

11.2.13 Benches under equipment or high cabinets which are fixed to the wall shall be larger than such equipment or cabinets in order to avoid injuries to its users. The distance between the bench and the equipment or cabinets shall allow the user to work in adequate posture.

11.2.14 Local area storage for oil samples boxes shall be provided. Benches shall be sized in order to allocate these samples, according to indicated on arrangement drawings.

11.2.15 A space for active charcoal filter shall be foreseen under the bench and this shall be connected to the water line of the Ultrapure Water Generator. The filter shall be supplied together with the Ultrapure Water Generator and characteristics shall be defined in detailing design phase.

11.2.16 Luminaries should be provided under suspended cupboards or shelves whenever they project shadows on the work plans.

11.2.17 Lighting under the hood of organic products should be supplemented so there is no shadow on the work plan due to the equipment.

11.2.18 Illumination shall be provided in order to attend to Ergonomic Report.

11.2.19 Two fume hoods, one for organics and other for inorganic, shall be provided with oily sewage line, utilities lines such as: vapor, compressed air, among others.

11.2.20 Both fume hoods shall have conjugated opening door of guillotine type with laminated glass horizontal sliding sheets, in order to allow different strategies of protection in the manipulation of samples.

11.2.21 Organic fume hood shall be provided with exhaustion and shall be located beside organic hood.

11.2.22 The organic compounds fume hood shall have a small drain (Ø = 100 mm) to discard fluids. It is required to be provided a bench with a free area on the side of fume hood for placing equipment used inside it with 700 mm width, under the organics hood.

11.2.23 The inorganic compounds fume hood shall have drain with 300 x 300 mm to discard fluids and prewash utensils.

11.2.24 The exhaustion hoods shall be manufactured in polypropylene. It is necessary a free height over the bench of exhaustion hoods of about 1100 mm, on account of the height of the glassware set used for the performance of the activities. Illumination for the exhaustion hood shall be such that electrical parts do not have contact with fumes.

11.2.25 The hood exhaust fan shall be located over the ceiling. Excessive noise shall be avoided in order to comply with maximum allowable noise requirements.

11.2.26 The organic hood and bonnet sink drain shall be interconnected to the oil drain of the platform and shall not be pressurized.

11.2.27 The laboratory shall be provided with fresh water lines located on the benches and work hoods, sinks and safety equipment (eyes-washer and emergency shower).

11.2.28 Hot water shall also be supplied to the sinks and bonnets and its minimum temperature shall be 80°C.

11.2.29 An oily sewage system directed to the primary shall be provided in the laboratory design (treatment, for instance, oil-water separator).

11.2.30 Drains for drips shall be of siphon type and the sewage lines provided with ventilation and resistant to chemical products used in the chemical laboratory.

11.2.31 The sewage for laboratory shall be independent of the sewage lines in the support areas.

11.2.32 Inorganic drain pipes shall be connected in the common header of 2” x 150# (ANSI) in polypropylene or stainless steel.

11.2.33 A drainage box for emergency shower shall be provided. The drainage box shall be connected to the oily sewage system and provided with grating at the same level of the floor, according to its flow.

11.2.34 The emergency shower shall be provided with a drain and channel with 30 to 50 mm, distant 1000 mm of the doors. Depressions or protuberances shall be avoided leveling the floor. It shall be installed (one) emergency shower placed in an easy access area, without obstructions.

11.2.35 The laboratory shall have 2 (two) emergency eye-wash, bench type. It shall be plastic ABS made, hose of high pressure, length of 1800 mm and connection 1/2" NPT. The eyes-wash shall be installed close of each sink.

11.2.36 The bonnets shall be provided with compressed air facilities.

11.2.37 The used products of bonnet sinks shall be stored in tanks. The tanks shall be fixed or movable.

11.2.38 Two movable tanks of kerosene (100 L each) and one movable tank of detergent (100 L) shall be foreseen outside laboratory, to supply by gravity the organic basin. In case of fixable tanks, one of kerosene (200 L) and one of detergent (100 L) shall be foreseen.

11.2.39 It is required that the displays of the registers of gases that enter the chromatograph stay on the equipment side facing forward for easy checking.

11.2.40 Gas cylinders shall be properly stored outside of laboratory. A cabinet shall be provided galvanized steel made, industrial type, with padlock, ventilated and shall be adequate for cylinders movement. Each cylinder set shall have 1100 mm width in order to accommodate 2 cylinders and a changeover manifold between them. The task of changing cylinders involves risk of leaking and the person that does the exchange shall be able to properly read the displays of the manifold as well as installation connections, therefore it is inadvisable to place the manifold in a height greater them 1600 mm, otherwise it is necessary to use stairs for the execution of the activity, imposing greater risk.

11.2.41 PVT cylinders should be stored outside of the laboratory for safety reasons (contains unstable oil and gas, the way they are extracted from the well), inside of their proper cases. The shelves of the cabinet where they are stored should be in a height close to the waist line of the carrier.

11.2.42 Whenever possible, use cart (with locks on the wheels) for the handling and transporting of full boxes with height that allows the user not to need to squat or bend the torso for packaging samples.

11.2.43 Garbage cans shall be provided to discard:

- Paper contaminated with oil;
- Recycled cotton towels contaminated with oil;
- Common trash for the laboratory area;
- Space for five containers (5 liters each) in the inorganic compounds area to discard of residue contaminated with heavy metals (in a cabinet).

11.2.44 Disposal of glassware shall be done in specific boxes with temporary storage in the cabinet.

11.2.45 Analysis that use Potentiometric Tritation activity requires a place to locate containers for disposing water contaminated with heavy metal. A cabinet for reagents is required (1 door) as well as paper towel holder. In order to allow the connection of the equipment with a computer station, it is required that there is a network outlet. There's a need to discard water waste that can be done in a container, sink or preferably in a drain.

11.3 Equipment and Furniture Specification

11.3.1 For Laboratory equipment specifications refer to: I-ET-3000.00-8222-941-PJN-001 - LABORATORY – EQUIPMENT.

11.3.2 For their respective quantities, location and dimensions refer to I-DE-3010.1M-8222-190-P4X-001 – LABORATORY - LAYOUT AND SECTION - EQUIPMENT AND FURNITURE.

Notes:

a. Areas for Hot Air Oven Equipment and Ice Machine shall be foreseen.

b. Electrical Installation must be provided for these equipment.

11.3.3 All laboratory equipment herein described are preliminary. These equipment shall be specified and approved by PNBV during Detail Design Phase due to the constant technology innovation which they are submitted.

11.3.4 For equipment not specified on I-ET-3000.00-8222-941-PJN-001 - LABORATORY – EQUIPMENT see information below, considering numbers as indicated on I-DE-3010.1M-8222-190-P4X-001 – Laboratory - Layout and Section - Equipment and Furniture:

<u>23. EMERGENCY DOUBLE SHOWER</u>

It shall be installed close the door and be activated by a handle, with sieve in stainless steel 304, diameter 250 mm and galvanized pipe, worked by lever fastened on the access door of the laboratory, provided with drain below of 30 mm to 50 mm in the floor and grating for leveling. The floor should present inclination towards the doors, with identification plate.

<u>24. EYE-WASH BENCH TYPE</u>

To be installed in bench. Used to wash eye, face and body. Drive through trigger valve in stainless steel, plastic nipple abs in green color. High-pressure hose with 1800 mm of length and ABS plastic connection 1/2" NPT. The eyes-wash shall be installed close of each sink.

27. POLYPROPILENE HOOD WITH BOTH SIDES CLOSED WITH LAMINATED GLASS (FOR ORGANIC BENCH)

Polypropylene exhaust system and independent mechanical ventilation, with reserve equipment (2x100%). With three points illumination. Continuous operation.

28. ARTICULATED POLYPROPILENE HOOD

Mechanical exhaust system with independent flow of air between 1000 and 1500 m³/h. Simultaneous and continuous operation.

30. PORTABLE NATURAL GAS CHROMATOGRAPHY

This Chromatograph shall also be provided as standby.

Purpose: micro gas chromatograph (µGC) set for analysis of natural gas composition for operational, commercial and legal compliance. It must be robust and easily packed and transferred between operational units.

The system must be in accordance to ASTM D1945 or ISO 6974 for hydrocarbons and CO_2. It must be supplied to analyze natural gas based upon the following samples, with lower detection limit of 1 ppm for all components: C1 to C9+, N_2, O_2, He, H_2, CH_4 and CO_2. About 100 ppm for H_2S.

Compact gas chromatograph set with 4 (four) analytic channels (one for backup); H_2S resistant; heated sample injectors for each channel; channels independently controlled by software; low detection limit down to 1 ppm; repetitivety in injection volume less than 0.5% relative standard deviation; linear dynamic range up to 106; work with He, H_2, N_2 or Ar as a carrier gas; max carrier gas pressure at inlet 1.5 psi with 1/8” connection; sample inlet 1/16”, stainless steel; able to analyze non-condensing gas between 0 and 110 oC; max pressure 14.5 psi; option of sample control by software with pump or continuous flow; option of able to inject samples by syringe, at front panel; analogic communication port of 6 signals (0 to 10V), LAN (TCP/IP), serial (RS232) for valve selection, and webserver; set must contain carrier gas cylinder case with manometer, rechargeable battery, battery recharger and temperature sensor cabinet; System set with methodology and tested at manufacturer for natural gas.

Three analytic channels must be compound each by:

- Injector: micro-injector without moving parts, injection volume set by software in the range 1µl to 10µl, heated up to 110°C with heated sample line and backflush system.
- Oven: thermal insulation up to 180°C.
- Capilar column, including backflush system: molecular sieve 5A at one channel, PoraPlot U at another channel and CP-Sil 5 CB at the third channel.
- Detector: thermal conductivity micro-detector (TCD) with dual channel (one line for sample and another for reference), internal volume 200 nl per channel; with four filaments
- 01 (one) standard sample filtering system Genie 170 with rotameter and an installation support for particle filter down to 5 µm; It must be supplied 5 (five) spare membranes.

Software must enable control for all chromatograph functions by communication protocols. It must be Windows XP Pro (SP3) and Windows 7 Pro compatible (32 bits); its

operation must be simultaneous and independent data acquisition for all analytic channels installed; it must allow custom reports, like creating company patterns; Software must afford several curve adjustment methods, e.g., linear, dot-by-dot, squared etc; it must allow saving reports at least in the following formats: .txt, .dif, .xls, .html, .csv and .wmf; it must monitor and alarm by consumable part limits, like septum, liner etc; it must contemplate funtions for natural gas reports, e.g., physical properties calculation, customizing, standard physical properties chart, saving as text, alarm for outrange results.

All accessories needed for process connection must be supplied, like tubes, nuts, unions etc.

20. Drainer glassware for 24 pins

Stainless steel pegboard and polypropylene pegs, with 24 pins and drainage system, for drying laboratory equipment as well as for general utility.

17/17A/17B. Cabinet for Gas Chromatograph Cylinder

Galvanized steel made, industrial type, with division, padlock, ventilated doors and shall be flush for cylinders movement.

21. Cabinet for Chemical Products

Shall be located outside area.

For handling, storage and transportation refer to NR-11 and NR-12.

Galvanized steel made, industrial type, with division and padlock.

22A. Cabinet for STORAGE (OIL, CONDENSATE AND PVT)

Galvanized steel made, industrial type, with division and padlock.

15. CABINET for OFFICE AND EPI storage

For office and EPI equipment storage. Cabinet shall be provided with shelves, doors and 6 (six) hooks.

11.4 Installations

11.4.1 Electrical Design

The electrical system shall be designed for safety operation and maintenance.

The laboratory shall be furnished with the internal power and lighting electrical installations fully done, in conformity with the Classification Society rules and connected to the distribution panels and junction boxes. The power and lighting sources will be as defined in I-ET-3010.00-5140-700-P4X-003 - ELECTRICAL REQUIREMENTS FOR PACKAGES FOR OFFSHORE UNITS and one Voltage Stabilizer with enough capacity to feed all installed or expected sensitive loads shall be added to the system. All sensitive loads shall be connected to the Voltage Stabilizer, therefore all outlet sockets inside the Laboratory Module shall be stabilized. The outlet sockets of the stabilized circuits shall be properly identified.

All panels shall be fitted with a main circuit breaker and the distribution circuits to the socket-outlets and lighting fixtures shall be 2P+E.

The 220V and 480V distribution panels or junction boxes shall be placed in the same side inside the laboratory, and shall be fitted with proper cable glands and supports for the interface cables.

It shall be provided a number of socket-outlets placed close to the consumers enough to feed all expected loads plus a distributed margin of 50%. All socket-outlets shall be in accordance with the Brazilian Standard ANBT 14136 and for 10A-250V or 16A-250V, according to the loads requirements.

All lighting fixtures shall be selected and distributed in order to provide visual comfort in the work positions, without shadow areas and objectionable glare.

The medium illuminance to be observed at the work benches and workstations will be as defined in I-ET-3010.00-5140-700-P4X-001 - SPECIFICATION FOR ELECTRICAL DESIGN FOR OFFSHORE UNITS. All electrical equipment and circuits shall be duly identified and all electrical equipment and cable routing devices shall be firmly grounded.

Wall sconces must have reflectors in order to prevent glare by direct visualization of the lamps.

The electrical installations shall comply with:

- I-ET-3010.00-15140-700-P4X-001 - SPECIFICATION FOR ELECTRICAL DESIGN FOR OFFSHORE UNITS;
- I-ET-3010.00-5140-700-P4X-003 - ELECTRICAL REQUIREMENTS FOR PACKAGES FOR OFFSHORE UNITS;
- I-ET-3010.00-5140-700-P4X-005 - REQUIREMENTS FOR HUMAN ENGINEERING DESIGN FOR ELECTRICAL SYSTEMS OF OFFSHORE UNITS.

The electrical material and equipment shall comply with:

- I-ET-3010.00-5140-700-P4X-002 - SPECIFICATION FOR ELECTRICAL MATERIAL AND EQUIPMENT FOR OFFSHORE UNITS;
- I-ET-3010.00-5140-712-P4X-001 - LOW-VOLTAGE INDUCTION MOTORS FOR OFFSHORE UNITS.

11.4.2 Hydraulic Design

It is required that used sinks have a depth of 50 cm, with its faucet between 30 cm and 35 cm above the cube border, suitable to the activity of the laboratory. Each basin should have a faucet type rotative long nape, minimum 30 cm, manufactured in stainless steel ANSI 316 and with registration 3/8”NPT, system of fast closing in stainless steel for cold and hot water.

11.4.3 Server

The sewage system must be suitable for oily bilge residues.

The laboratory drains must be connected to the sewer system oily, it should work by gravity and should not be pressurized.

11.4.4 Facilities

Utility lines shall be installed in such configuration that allows easy access and maintenance.

All utility lines shall have general valves that allow fast locking in the case of leakage or accident in the chemical laboratory.

11.4.5 HVAC System

For HVAC systems refer to:

- I-DE-3010.1M-5250-942-P4X-004 - HVAC SYSTEM - LABORATORY DUCT AND EQUIPMENT LAYOUT;
- I-ET-3010.1M-5250-300-P4X-001 – HVAC SYSTEM DESIGN;
- I-DE-3010.1M-5250-942-P4X-004 - HVAC SYSTEM – LABORATORY DUCT AND EQUIPMENT LAYOUT.

Exhaust ducts of Laboratory shall be polypropylene made, with low-flame spread characteristics. For more details, refer to above documentation.

11.4.6 Safety

The laboratory should have 2 (two) eye-wash, emergency equipment for laboratory bench. For specification, see item 11.3.

An emergency shower shall be installed in the laboratory placed in an easy access area, without obstructions on the doors of the laboratory. For specification, see item 11.3.

The laboratory design shall have, according to the installation characteristics, a system of detection, alarm and firefighting.

The availability of flame protection mantle shall be provided in the laboratory, especially close to places with higher risk of fire and explosion.

1 (one) emergency lamp red rotation shall be installed above of the door of communication between the office and the laboratory (side of the laboratory).

The laboratory shall have the following signaling of safety: “SAÍDA”, “LAVA-OLHOS”, “CHUVEIRO DE EMERGÊNCIA”, “ESGOTO INORGÂNICO” and “ESGOTO ORGÂNICO”.

All signaling shall be submitted for PNBV approval.

12 MISCELLANEOUS

12.1 Miscellaneous shall be distributed and installed on Laboratory, M-13 and M-17, as described below. If there is any inconsistence between this list and arrangement drawings, the arrangements drawings shall prevail.

12.2 Miscellaneous items, which require wall mounting, like decorative boards, general arrangements, etc. shall be distributed and installed in agreement with PNBV. Safety signs shall be located in accordance with applicable regulations. General arrangement with location of boards and safety signs shall be submitted to PNBV approval. All boards shall have stainless steel or aluminum frames and be protected against damage.

- Boards, tables and publications - boards shall be located in closed areas according to NORMAM 1, chapter 9, section VI.
- DPC (Brazilian Navy Authority) shall be consulted on the exact quantity of boards, tables and publications and their location shall be confirmed in the final stage of detailed design phase.

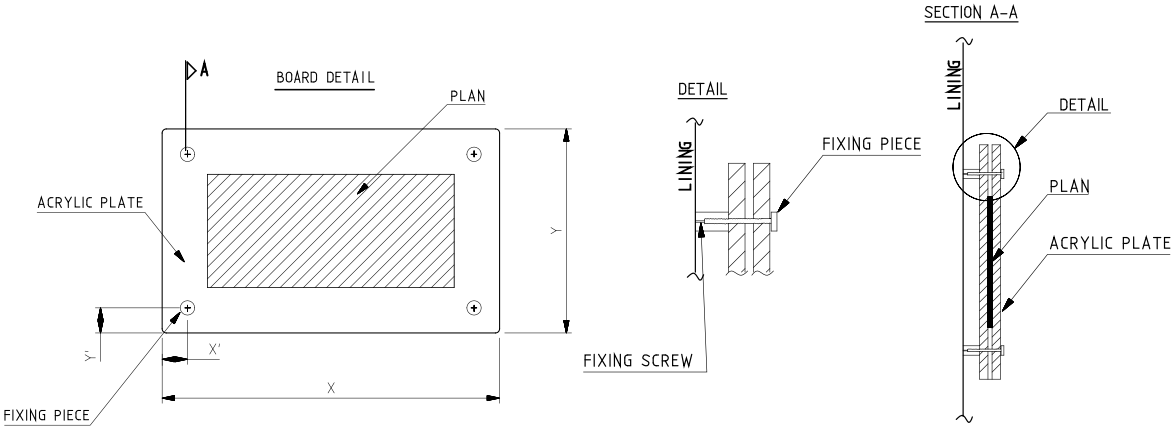

- Magnetic board - Manufacturer standard. Dimensions about 1200(L) x 1000(W). Quantity – 1pc;
- Garbage basket – Stainless steel finishing, with cover and pedal. Quantity – 5 pc;
- Garbage waste disposal bins - shall be provided considering the characteristics of the compartments in which they are installed, using specific containers for paper, plastic and other wastes that are generate. Colors shall be according to “Resolução CONAMA nº 275”.
- Coat hooks (with two hooks), stainless steel or chrome brass. Quantity – 3 pc;
- Wall Clocks (battery driven, water resistant, stainless steel structure) Quantity – 1 pc;
- Door mats – For humid and saline environment. Rubber sheet, industrial type. Dimensions around 1200 x 600 mm. All entrances to Laboratory, M-13 and M-17 from external areas shall have door-mats. Quantity – 25 pc;
- Paper towel racks fastened next to each sink - Stainless steel, Industrial type. Quantity – 2 pc;
- Water gallon – The use of water gallons ad its storage on external area shall be analyzed during the detailed design phase regarding contamination risks, temperature and handling.

13 ERGONOMIC ASPECTS

13.1 General

13.1.1 The safe work practices required for personnel safe work in the offshore environment shall be evaluated and validated by PNBV during the detailed design

phase. It includes proper lifting devices and techniques, posture relief methods, use of ergonomic principles for lifting and moving materials, equipment or pieces of equipment, inside industrial rooms, service rooms, and work rooms as well in open areas.

13.1.2 Workstations shall be designed according to the work characteristics, the level of mechanization and automation, and shall use “state of the art” solutions in design, materials and technologies for the offshore industries.

13.1.3 Rooms’ design shall be based on task analyses of functions, controls and displays shall be located in a logical way with respect to frequency of use and importance for safe operation; the movement of a control device should be consistent with the effect in direction and magnitude. They shall be clearly marked in Portuguese language. Displays and controls shall be designed in accordance with acknowledged ergonomic principles and in order to allow the operator to carry out his tasks in a safe way. The variations of display types shall be minimized. Screens, panels and lighting fixtures shall have a location that provides a satisfactory view in a normal working posture. It shall be easy to adjust the height and angle of computer screens and keyboards, as well as their distance to the operator. Total system overviews should be available from the displays, giving the operator opportunities to watch global process performance.

13.1.4 The anthropometric dimensions should be taken into account in architecture project and other areas of UEP for sizes and heights of work surface in the control rooms, working rooms and offices.

13.1.5 The base of the furniture must be detailed in order to reach the specific practices required for safe work offshore staff to work free of injury.

13.1.6 The equipment specifications and location, speakers, screens and TV shall be provided in such a way to guarantee an efficient and pleasant result, and supplied by a specialized company.

13.1.7 The following issues shall be implemented, regarding work chairs, lighting, thermal and acoustic solutions:

13.2 Work chairs

The design of a working chair that fits different sizes of people is a design problem that shall receive special attention during the detailed engineering design phase. Most work chair designs try to accommodate people of different sizes and shapes with a series of mechanical adjustments. People are more likely to get proper support from a chair that requires only minor adjustments to fine-tune the fit. Chairs model shall be suitable to be used by people with different shape and weight. A person sitting in a properly sized chair starts with a fit that is fairly close to perfect. Adjustments for seat height, lumbar height and depth, arm height and width, and tilt tension enable the sitter to fine-tune chair dimensions and performance to personal preferences. The material of the seat and backrest shall be able to automatically conform to individual body contours. The chairs must have adequate casters to the type of floor of each room. For specification, refer to item 10.0.

13.3 Lighting

13.3.1 Bright lights shining on the display screen "wash out" images, making it harder to clearly see the information. Straining to view objects on the screen can lead to eye fatigue. Proper placement of lighting and selecting the right level of illumination can enhance the ability to see monitor images. For example, if lighting is excessive or causes glare on the monitor screen, the user may develop eyestrain or headaches, and may have to work in awkward postures to view the screen. Ideally, the lighting environment should be conducive to both reading of hard copy and screen based work. Use light, matte colors and finishes on walls and ceilings and workstation, to prevent glare and the color shall be light (off white is recommended to better the contrast and visualization of the task). The area close to the screen shall have differentiated circuits and shall be dimmerized.

13.3.2 Quantity and quality of lighting are both important. Lower, rather than higher, powered lamps shall be provided for task lights, since excessive levels of task lighting can put strain on the eye muscles in switching between brightly lit paper copy and a self-illuminated screen. For computer work, use well-distributed diffuse light. The advantage of diffuse lighting is that there are fewer hot spots (or glare surfaces) in the visual field, and the contrasts created by the shape of objects tend to be softer.

13.3.3 Placing the monitor beside window(s) as well as a window directly behind the monitor or behind the user will cause glares. If not possible, due to the arrangement plan, the use of blinds or drapes to control the light shall be provided. The most important aspect of lighting shall be the reduction of glare and bright reflections from the screen of workstations (the task light should provide light from the left and right), as well as to provide a pleasant atmosphere.

13.3.4 The quality of the illumination must consider aspects of: safety in handling and reading gradation of glassware, cognitive aspects of reading and writing information and the visual comfort in reading monitors and electronic panels. Therefore it is required that the illumination equipment have anti-glare apparatus.

13.3.5 Wall lamps in height to eye level of the operators, should always have reflectors so that the angle incidence of the luminous flux does not produce glare.

13.3.6 A mixture of fluorescent, incandescent light or lamp with a color temperature equivalent shall be provided to offices, control rooms and working rooms.

13.3.7 The possible solutions should be implemented, whenever required so:

- Provide light diffusers so that desk tasks (writing, reading papers) can be performed while limiting direct brightness on the computer screen.
- Provide supplemental task/desk lighting to adequately illuminate writing and reading tasks while limiting brightness around monitors. For LCD monitors higher levels of light are usually needed for viewing tasks.

13.4 Thermal comfort

Comfort at work is an important issue. The best temperature for the workplace is the temperature most people find comfortable without particularly discomforting the few people who have unusual temperature preferences. Users may experience discomfort from poorly designed or malfunctioning ventilation systems, for example, air conditioners that directly "dump" air on users. To avoid this, desks, chairs, and

other office furniture shall not be placed directly under air conditioning vents unless the vents are designed to redirect the air flow away from these areas.

13.5 Acoustic Comfort

Acoustic design shall be applied to accommodate equipment layout, general comfort, workability, and ergonomics in order to achieve the efficient acoustic performance of the room. The optimized acoustic environment shall be achieved with low-noise air conditioning systems, sound insulating windows and doors, floor coverings with sound dampening properties and lastly treatment of the wall and ceiling panels.

The Noise Control Report (and Noise control analysis, required during detailed design phase) shall be a guide of acoustic solutions to be applied. The Insulation arrangement drawing shall represent a picture of all required insulation.

For Acoustic Comfort requirements, refer to I-ET-3010.1M-1200-300-P4X-001 – NOISE CONTROL REQUIREMENTS FOR TOPSIDE.

13.6 Lifting and Transportation

<u>The following requirements shall be observed and implemented:</u>

- Transportation ways where trolleys and carts are used shall not contain steps and thresholds.
- Lifting and transportation gear where lifting or transportation of more than 25kg is required.
- Trolleys, transportation tables and similar means of transportation should be easily maneuverable and have a low rolling resistance. Minimum two of the wheels shall be lockable.
- Units in everyday use shall not be stored above shoulder height (1500 mm) or below 900 mm.
- Permanent arrangements (e.g. monorails, pad eyes) shall be installed for material handling of equipment/objects heavier than 200kg.
- In addition, when designing for permanent or temporary lifting equipment, the estimated frequency of the lifting operations shall also be taken into account. For frequent/routine lifting operations, permanent equipment shall be installed.
- Manual lifting of gas bottles shall be avoided. Cupboards for gas bottles shall be of a non-threshold type.
- Doors (L x H) shall be sized in order to assure the entrance of equipment and stretcher without obstacles. Removable panels shall be provided and installed if the doors alone do not provide enough room for cargo handling. In this case, doors and removable panel location shall be carefully studied in order to guarantee the access, entrance and maintenance of all equipment parts.
- For more recommendations regarding Lifting and Transportation, refer to I-ET-3010.1M-1350-196-P4X-001 – ERGONOMIC REQUIREMENTS FOR TOPSIDES.