INDEX OF REVISIONS

REV.	DESCRIPTION AND/OR REVISED SHEETS
0	ORIGINAL
A	REVISED WHERE INDICATED
B	REVISED WHERE INDICATED, INCLUDING CONSISTENCY ANALYSIS
C	REVISED WHERE INDICATED

	REV. 0	REV. A	REV. B	REV. C	REV. D	REV. E	REV. F	REV. G	REV. H
DATE	APR/19/22	OCT/21/22	DEC/02/22	DEC/09/22					
DESIGN	EEI	EEI	EEI	EEI					
EXECUTION	U361	U361	U361	U361					
CHECK	U5D6	U44D	U44D	U44D					
APPROVAL	CDC1	U5D6	U5D6	U5D6					

SUMMARY

1 INTRODUCTION

1.1 Object

1.1.1 This document establishes the main technical requirements that shall be considered in the Special Monitoring Systems.

1.1.2 These requirements are either:

- general information related to all systems;
- requirements of subjects that are not defined in other documents;
- remarks that shall be considered during Detailed Design Phase.

1.2 Definitions

1.2.1 Refer to I-ET-3010.00-1200-940-P4X-002 – GENERAL TECHNICAL TERMS.

1.3 Abbreviations, Acronyms and Initialisms

The following abbreviations are used in this document:

- A&C Automation & Control
- AEPR Automation & Electrical Panels Room
- ALARM Alarm Management System
- AMS Asset Management System
- BSDL Boca de Sino Diverless
- CCR Central Control Room
- CI-E Electrical Intelligent Completion
- CSS Control and Safety System
- DHSV DownHole Safety Valve (synonym of SCSSV)
- DHSV-E DownHole Safety Valve – Electrical
- DMZ Demilitarized Zone
- EHM Electrohydraulic Multiplex Control System
- ESD Emergency Shutdown
- EWS Engineering Workstation
- FGS Fire and Gas System
- HD *Hidráulico Direto* (Direct Control of a WCT)
- HMI Human Machine Interface
- HPU Hydraulic Power Unit
- HSTS Hull Structural Tanks Level, Interface, Pressure And Temperature Monitoring Systems
- IWCS Intelligent Well Control System
- LAN Local Area Network
- MCS Subsea Master Control System
- MPA Módulo de Procedimentos Automatizados (Automatized Procedures Module)
- OPC Open Platform Communications
- OWS Operation Workstation
- PCS Process Control System
- PDG Permanent Downhole Gauge

- PLC Programmable Logic Controller
- PRM Permanent Reservoir Monitoring
- PSD Process Shutdown
- PUPS Portable Umbilical Pressurization System
- P-XO Pig Crossover Valve
- SAS Subsea Acquisition System
- SCM Subsea Control Module
- SCSSV Surface Controlled Subsurface Safety Valve (synonym of DHSV)
- SESDV Subsea Emergency Shutdown Valve
- SOS Supervision and Operation System
- SPM Subsea Production Manifold
- SPW Satellite Production Wells
- SPCS Subsea Production Control System
- TPT-AR Temperature and Pressure Transmitter - High Resolution
- TSUDL Unified Diverless Support Tube (Portuguese Acronym)
- VHIF Válvula Hidráulica de Interface com a Formação (Reservoir Hydraulic Interface Valve)
- WAG Water Alternating Gas Injection Manifold
- WCR Well Control Rack
- WCS Well Completion System
- WCT Wet Christmas Tree
- WCT-MUX Wet Christmas Tree – Multiplexed
- XO Crossover Valve

2 REFERENCE DOCUMENTS, CODES AND STANDARDS

2.1 External References

2.1.1 International Codes, Recommended Practices and Standards

ASTM - AMERICAN SOCIETY FOR TESTING AND MATERIALS

ASTM	G21	STANDARD PRACTICE FOR DETERMINING RESISTANCE OF SYNTHETIC POLYMERIC MATERIALS TO FUNGI

IEC - INTERNATIONAL ELECTROTECHNICAL COMMISSION

IEC	60068	ENVIRONMENTAL TESTING – ALL PARTS
IEC	60079	EXPLOSIVE ATMOSPHERES - ALL PARTS
IEC	60092-504	ELECTRICAL INSTALLATIONS IN SHIPS - PART 504: AUTOMATION, CONTROL AND INSTRUMENTATION
IEC	60529	DEGREES OF PROTECTION PROVIDED BY ENCLOSURES (IP CODE)
IEC	60533	ELECTRICAL AND ELECTRONIC INSTALLATIONS IN SHIPS - ELECTROMAGNETIC COMPATIBILITY (EMC)
IEC	60945	MARITIME NAVIGATION AND RADIOCOMMUNICATION EQUIPMENT AND SYSTEMS – GENERAL REQUIREMENTS –

		METHODS OF TESTING AND REQUIRED TEST RESULTS
IEC	61000	ELECTROMAGNETIC COMPATIBILITY (EMC) SERIES - ALL PARTS
IEC	61086	COATINGS FOR LOADED PRINTED WIRE BOARDS (CONFORMAL COATINGS) – ALL PARTS
IEC	61131	PROGRAMMABLE CONTROLLERS - ALL PARTS

IEEE – INSTITUTE OF ELECTRICAL AND ELECTRONICS ENGINEERS

IEEE	802.1Q	LOCAL AND METROPOLITAN AREA NETWORKS - BRIDGES AND BRIDGED NETWORKS

ISA – INTERNATIONAL SOCIETY OF AUTOMATION

ISA	5.1	INSTRUMENTATION SYMBOLS AND IDENTIFICATION

2.1.2 Brazilian Codes and Standards

INMETRO – INSTITUTO NACIONAL DE METROLOGIA, NORMALIZAÇÃO E QUALIDADE INDUSTRIAL

PORTARIA Nº 115 (21/MARÇO/2022)	REQUISITOS DE AVALIAÇÃO DA CONFORMIDADE PARA EQUIPAMENTOS ELÉTRICOS PARA ATMOSFERAS EXPLOSIVAS - CONSOLIDADO.

2.1.3 All MTE – Ministério do Trabalho regulations (NRs) shall be followed.

2.2 Internal Documents

2.2.1 Project Specification

I-DE-3010.2D-1200-942-P4X-002	GENERAL ARRANGEMENT
I-DE-3010.2D-1200-944-P4X-001	GENERAL NOTES
I-DE-3010.2D-5520-800-P4X-002	AUTOMATION AND CONTROL ARCHITECTURE
I-DE-3010.2D-5520-800-P4X-004	NETWORK INTERCONNECTION DIAGRAM
I-DE-3010.2D-1428-942-P4X-001	M-17 – AUTOMATION AND ELECTRICAL – EQUIPMENT LAYOUT PLAN
I-ET-3010.00-1200-800-P4X-002	AUTOMATION, CONTROL AND INSTRUMENTATION ON PACKAGE UNITS
I-ET-3010.2D-1200-800-P4X-014	AUTOMATION INTERFACE OF PACKAGED UNITS
I-ET-3010.2D-1200-800-P4X-005	FIELD INSTRUMENTATION
I-ET-3010.2D-1200-800-P4X-001	INSTRUMENTATION ADDITIONAL TECHNICAL REQUIREMENTS
I-ET-3010.00-1210-888-P4X-001	PRODUCTION WELL CONTROL RACK
I-DE-3010.00-1210-888-P4X-001	PRODUCTION WELL CONTROL RACK - LAYOUT
I-DE-3010.00-1210-888-P4X-002	PRODUCTION WELL CONTROL RACK - FUNCTIONAL DIAGRAM
I-ET-3010.00-1210-888-P4X-003	SESDVS CONTROL RACK

I-DE-3010.00-1210-888-P4X-005	SESDVs CONTROL RACK - LAYOUT
I-DE-3010.00-1210-888-P4X-006	SESDVs CONTROL RACK - FUNCTIONAL DIAGRAM
I-ET-3010.00-5520-861-P4X-001	CONTROL AND SAFETY SYSTEM – CSS
I-ET-3010.00-5520-861-P4X-003	VIRTUALIZATION OF AUTOMATION SYSTEM COMPUTERS
I-ET-3010.00-1200-859-P4X-001	AUTOMATION REQUIREMENTS FOR CORROSION MONITORING SYSTEM (CMS)
I-ET-3010.00-5520-861-P4X-002	SUPERVISION AND OPERATION SYSTEM - SOS
I-ET-3010.00-5520-888-P4X-001	AUTOMATION PANELS
I-ET-3010.00-5140-700-P4X-003	ELECTRICAL REQUIREMENTS FOR PACKAGES FOR OFFSHORE UNITS
I-MD-3010.2D-5520-800-P4X-001	AUTOMATION AND CONTROL SYSTEM FUNCTIONS
I-ET-3010.00-1200-800-P4X-013	GENERAL CRITERIA FOR INSTRUMENTATION PROJECTS
I-ET-3000.00-5139-800-PEK-004	HYDRAULIC POWER UNIT FOR SUBSEA EQUIPMENT WITH MULTIPLEXED ELECTROHYDRAULIC AND DIRECT HYDRAULIC CONTROL SYSTEM (OWN FLOATING PRODUCTION UNIT)
I-ET-3000.00-1516-823-PEK-060	SUBSEA PRODUCTION CONTROL SYSTEM FOR FPSO
I-RL-3010.2D-1200-940-P4X-004	PROCESS SIMULATION REPORT
I-ET-3010.00-5529-812-PAZ-001	ANNULUS PRESSURE MONITORING AND RELIEF SYSTEM.
I-ET-3010.2D-1200-320-P4X-101	CENTRIFUGAL GAS MOTOCOMPRESSORS PACKAGE SPECIFICATION
I-ET-3010.00-1200-850-P4X-002	ASSET MANAGEMENT SYSTEM (AMS)
I-ET-3010.2E-1351-800-P4X-001	HULL STRUCTURAL TANKS LEVEL, INTERFACE, PRESSURE AND TEMPERATURE MONITORING SYSTEMS
I-ET-3010.00-1351-140-P4X-002	DIGITAL TWIN FOR HULL STRUCTURAL INTEGRITY MANAGEMENT
I-DE-3010.00-1300-850-PEK-001	RISER SUPPORT P&ID
I-ET-3010.00-1519-140-P56-001	UNIFIED DIVERLESS SUPPORT TUBE
I-LI-3010.00-1300-270-P56-001	UNIFIED DIVERLESS SUPPORT TUBE (TSUDL) PARTs LIST
I-ET-3000.00-1516-823-PEK-006	SPU PROJECT DETAILS WET MONITORING SIGNALS (TPT, PT and PDG)
I-ET-3A40.03-1350-940-P56-001	FPSO STRUCTURES AND FACILITIES FOR RISER SYSTEM
I-ET-3A50.00-1350-940-P56-001	FPSO STRUCTURES AND FACILITIES FOR RISER SYSTEM
I-ET-3010.00-1300-850-PEK-001	CONTROL AND MONITORING SYSTEM FOR RISER SUPPORTS
I-ET-3010.00-1300-850-PEK-002	HULLSIDE UMBILICAL FOR RISER SYSTEMS
I-DE-3000.00-5520-850-PEK-001	BLOCK DIAGRAM – SUBSEA MONITORING SYSTEMS
I-ET-3010.00-1300-279-PEK-002	5K HYDRAULIC ACTUATOR FOR BSDL / DIVERLESS BELL MOUTH
I-DE-3010.00-1300-279-PEK-003	5K HYDRAULIC ACTUATOR ASSEMBLY FOR BSDL

I-ET-3010.00-1300-279-PEK-003	MTL MATERIAL AND MANUFACTURING TECHNICAL SPECIFICATION
I-DE-3010.00-1300-270-P56-001	LATERAL SUPPORT MODULE - MTL
I-ET-3000.00-1510-854-PEK-002	MONITORING SYSTEM FOR SUBSEA EMERGENCY SHUT-DOWN VALVE (SESDV) – FPU SCOPE
DR-ENGP-M-I-1.3	SAFETY ENGINEERING GUIDELINE

3 TECHNICAL REQUIREMENTS

3.1 Optimization Software

3.1.1 8 (eight) BUYER owned software packages shall be installed and customized. These software are dedicated to control loops optimization, advanced control, monitoring and optimization, as well as alarm management.

3.1.2 The applications are:

- BR-TUNNING and BR-PERFX for control loops tunning;
- BR-OPTIMUS and MPA for advanced control and optimization:
  Among other modules, MPA will consist of the Water Injection Advanced Control System, the Production Well Assisted Start-up System and the Band and Stabilization Control System;
- BR-ALARMEXPERT for Alarm Management;
- WELLBOT for autonomous operation of wells with flow instability;
- CO2 Separation Membranes Digital Twin for condition-based monitoring of the CO2 gas flow though the membranes;
- PCHE Monitoring System for performance evaluation of the Printed Circuit Heat Exchangers.

3.1.3 These software packages shall be provided by BUYER, being part of the present scope all services related to their configuration, installation and interconnection to CSS/SOS.

3.1.4 The applications BR-PERFX and BR-ALARMEXPERT shall be installed in a virtual machine in Telecom's "Automation DMZ Cluster" in the DMZ.

3.1.5 The other remaining 6 (six) applications shall be installed in a virtual image server called "BR OPTIMIZATION SERVER". This virtual image shall run at PN-5523009 – TOPSIDES SOS PROCESS CLUSTER, and shall have the following characteristics:

- Microsoft Windows® Operating system (at its last stable version) or its equivalent at purchase time;
- Microsoft® Office software or its equivalent at purchase time;
- Other specific communication driver(s) necessary to integrate with the SOS shall be submitted for BUYER approval.
- This virtual image shall be accessible from all Topsides SOS HMIs (PN-5523002A/E) and Hull SOS HMI (PN-5523502A/E) thin clients.

3.2 WCS Cabinet

3.2.1 This cabinet will contain both the SAS and IWCS equipment. The cabinet TAG shall be PN-5524002A/D.

3.2.2 WCS Cabinet shall be supplied with standard 19-inch racks (42 u), 800mm (W) x 800mm (D) x 2100mm (H), and all panel accessories (including circuit breakers, lighting, thermostats, limit switches, terminal strips, DIN rails, earth fault detectors, two internal 24 Vdc/40A stabilized power supplies, ventilation, two 24 Vdc redundancy modules, cable glands, 220Vac/300W auxiliary power outlet – both in NEMA 5-15 standard and in ABNT 14136 standard, etc) .

3.2.3 These four modular panels shall be installed at air conditioning environment, at AEPR. The panels shall comply with I-ET-3010.00-5520-888-P4X-001 – AUTOMATION PANELS.

3.2.4 Gigabit L3 managed ethernet switches (rack mounted) shall also be supplied by SELLER, one for each section (total of four switches). For each ethernet switch, a patch panel (rack mounted) shall be supplied. Switches shall have the same brand and model of L3 switches in the Package Unit LAN. Quantity of switches is preliminary and shall be confirmed in Detail Engineering Design in order to interconnect all SAS, IWCS and Package Unit LAN equipment.

3.2.5 BUYER will supply other rack mounted equipment (SAS and IWCS components).

3.2.6 SELLER shall also provide and install any devices included in sections 3.3 and 3.4.

3.2.7 All cabling (including electrical cables from riser balcony and all cables – instrumentation, signal, power –, with suitable connectors and terminations), patch panels, DIOs, and any other accessories required for panel correct interconnection shall also be supplied and installed by SELLER. Internal connections of these panels shall also be SELLER scope.

3.2.8 Installation, Integration, Configuration, Commissioning and Tests of SAS and IWCS equipment are also under SELLER scope.

3.3 Subsea Acquisition System (SAS)

3.3.1 The Subsea Signal Acquisition System (SAS) shall be responsible for monitoring pressure and temperature sensors (PDG and TPT-AR) of each direct control (HD) satellite well.

3.3.2 This system shall be housed in PN-5524002A/D – WCS Cabinet. SAS equipment consists of servers and converters able to read all PDGs and TPT-ARs of, at least, 2 (two) satellite production wells.

3.3.3 SAS shall have at least the following features:

- Visualization of data, such as: selected sensor, selected unit, date and time, sensor voltage, sensor drained current, all other sensor data, etc;

- Communication interface: EIA-485 with MODBUS-RTU communication protocol for PDG digital signal and for TPT – AR signal;
- SAS programming: insertion of date and time (and external date and time setting using SNMP), configuring sensor types, configuring sensor factors (and other parameters), acquisition of stored process data at memory, etc;
- SAS shall have an internal memory for storing process data. Storage interval shall be programmable and defined by user.

3.3.4 SELLER shall provide enough terminal strips inside PN-5524002A/D to interconnect the pairs of wires from sensors. All wires shall be fully identified. The dimensions of devices and the quantity of SAS equipment, as well as interconnection requirements, shall be confirmed at Detailed Design Phase.

3.3.5 In order to enable the SAS equipment installation, cables shall be provided by SELLER to connect PDG and TPT-AR signals from umbilical junction boxes of the direct control satellite production wells to PN-5524002A/D.

3.3.6 TPT and PT signals from Direct Control WCTs shall be wired from umbilical junction box to the CSS. 6 (six) Analog Inputs shall be considered wired to CSS – PCS. These signals can be 4-20 mA or MODBUS RTU.

3.3.7 The SAS modules shall communicate with MCS panels via four L3 redundant switches installed in PN-5524002A/D. These switches shall have at least 32 ports. WCS Cabinet switches shall also be the pathway to communicate from other subsea systems to Package Unit LAN, as depicted in I-DE-3010.2D-5520-800-P4X-002 - AUTOMATION AND CONTROL ARCHITECTURE.

3.3.8 Panels PN-5524002A/D shall be powered according to I-ET-3010.00-5140-700-P4X-003 – ELECTRICAL REQUIREMENTS FOR PACKAGES FOR OFFSHORE UNITS. Whenever necessary, power converters and AC/DC stabilized power supplies shall be included in the panel in order to make all appropriate conversions between the power supplied by the Electrical System and the panel's internal components power requirements.

3.3.9 For further details see I-ET-3000.00-1516-823-PEK-006 - SPU PROJECT DETAILS WET MONITORING SIGNALS (TPT, PT AND PDG).

3.4 Intelligent Well Control System (IWCS)

3.4.1 Intelligent Well Control System (IWCS) is responsible for:

- Opening / closing hydraulic downhole valves
- Read data from downhole sensors

These valves and sensors are used to better control the production and injection of each well and interval in the reservoir.

3.4.2 This system shall be housed in PN-5524002A/D – WCS Cabinet.

3.4.3 Each IWCS equipment group shall be according to the following configurations:

3.4.3.1 Up to four (4) rack mounted Engineering Workstations, each one for up to four (4) wells with CI-HD from a given supplier. Each Engineering Workstation comprises a 6U Notebook with monitor;

3.4.3.2 One (1) rack mounted 6U Engineering Workstation with a Notebook and monitor for four (4) wells with CI-HD from the same supplier.

3.4.3.3 Maximum electrical power of each IWCS equipment group is 1.5 kVA, with heat dissipation of 400 Watts. The exact IWCS specifications for both options including network cable interface will be provided by BUYER during the Detailed Engineering Design phase.

3.4.3.4 The dimensions of devices and the quantity of IWCS equipment, as well as interconnection requirements, shall be confirmed at Detailed Design Phase.

3.4.3.5 IWCS equipment, which will be provided by BUYER, may be not available for shipyard installation before the FPU starts production. SELLER shall provide at any time with no cost to BUYER the installation, integration and commissioning of any quantity of IWCS equipment whenever requested, including while the FPU is offshore.

3.5 Electrical Intelligent Completion (CI-E) and Electrical DHSV (DHSV-E)

3.5.1 An Intelligent Completion (CI) is a well control system equipped with downhole sensors and remotely operated flow control valves. When the downhole valves are actuated using only electrical power, the system is called CI-E.

3.5.2 DHSV-E is one of the two possibilities of actuation foreseen for the DHSVs. (The other one is Hydraulic actuation, which is carried out by the UH-1210001 - HYDRAULIC POWER UNIT FOR SUBSEA SYSTEMS)

3.5.3 The CI-E and DHSV-E are P2C Package type and will have 12 (twelve) associated panels (PN-1210011A/M). Each panel supports up to 5 (five) CI-E or 5 (five) DHSV-E from the same supplier. All panels shall be installed in AEPR (Module 17). The signals from these packages shall be integrated with the CSS and with MCSs through the Ethernet Switches of PN-5524002A/D – WCS CABINET.

3.5.4 CI-E and DHSV-E panels shall have the following main characteristics:

- Ethernet Communication via OPC-UA protocol;
- Bottom cable access and frontal access;

3.5.5 These panels shall be powered as according to I-ET-3010.00-5140-700-P4X-003 – ELECTRICAL REQUIREMENTS FOR PACKAGES FOR OFFSHORE UNITS. Whenever necessary, power converters and AC/DC stabilized power supplies shall be included in the panel in order to make all appropriate conversions between the power supplied by the Electrical System and the panel's internal components power requirements.

3.5.6 These panels shall be supplied by BUYER.

3.5.7 In case of an ESD-4 event, if the DHSVs are being controlled by the DHSV-E panel, they shall close after the WCT valves (which are controlled by the MCS control cabinets) have been closed. This logic may be implemented by delaying the ESD-4 signal between the MCS control cabinets and the DHSV-E panel. If the DHSVs are being controlled by the MCS control cabinets (along with the other WCT valves), a single ESD-4 signal shall be sent to MCS. All CI-E and DHSV-E panels shall have ESD-4 signal available.

3.5.8 SELLER scope consists of retrieving the panels in BUYER warehouse, transport them to their final location in the UNIT, install and connect them to appropriate systems, commission and test. Any accessories, converters, cables, trays etc necessary for the correct connection of the panels shall be supplied and installed by SELLER.

3.6 Subsea Production Control System (SPCS)

3.6.1 The SPCS shall be designed to provide the operation, control and monitoring of the following types of subsea equipment:

- Satellite Production Wells (SPW), each with a Wet Christmas Tree (WCT) fitted for Direct Hydraulic Control System (WCT-HD);
- Satellite Production Wells (SPW), each with a Wet Christmas Tree (WCT) fitted for Electrohydraulic Multiplex Control System (WCT-MUX);
- Subsea Water Alternating Gas Injection Manifolds (WAG) equipped with an Electrohydraulic Multiplex Control System (EHM);
- Subsea Production Manifold (SPM) equipped with an Electrohydraulic Multiplex Control System (EHM);
- Gas pipeline SESDV (Subsea Emergency Shutdown Valve) actuated by Direct Hydraulic Control System.

3.6.2 1 (one) Hydraulic Power Unit (UH-1210001) for water-based control fluid shall be provided with a local control panel (PN-UH-1210001) to supply both the WCT-MUX and the WCT-HD. PN-UH-1210001 (hardwired signals) shall be interconnected with CSS. This HPU shall be able to be supervised by SOS HMIs through digital network communication (Gigabit Ethernet).

3.6.3 This HPU shall comply with I-ET-3000.00-5139-800-PEK-004 - HYDRAULIC POWER UNIT FOR SUBSEA EQUIPMENT WITH MULTIPLEXED ELECTROHYDRAULIC AND DIRECT HYDRAULIC CONTROL SYSTEM (OWN FLOATING PRODUCTION UNIT).

3.6.4 SPCS interfaces shall be properly integrated with A&C System.

3.6.5 All screens of subsea system shall be accessible from SOS.

3.6.6 One of the operation interfaces of the Intelligent Completion system is in the SPCS (see item 3.6.9.3).

3.6.7 For further details regarding SPCS, refer to I-ET-3000.00-1516-823-PEK-060 - SUBSEA PRODUCTION CONTROL SYSTEM FOR FPSO.

3.6.8 Direct Hydraulic Control System - General Description

3.6.8.1 Direct Hydraulic Control System is a type of control system used for actuating some subsea hydraulic valves. In this system, the solenoids that actuate each of the submarine valves are placed in the Topsides of the Unit. The Direct Hydraulic Control System consists of actuating these solenoids and sending the hydraulic power directly to the actuated valve.

3.6.8.2 Hydraulic Power Unit (UH-1210001) is responsible for generating the required hydraulic power. Well Control Racks and SESDV racks distribute the hydraulic fluid to the submarine valves' umbilicals.

3.6.8.3 Signal Acquisition System (SAS) is responsible, among other uses, for acquiring data relative to Wet Christmas Trees using Direct Hydraulic Control System.

3.6.9 EHM System General Description

3.6.9.1 EHM System is a type of control system used for actuating subsea equipment hydraulic valves and for monitoring subsea sensors. It consists in sending electrical signals and hydraulic power supply in a single umbilical departing from topsides to one or more "subsea control modules" or "control pods". The control pods are responsible for decoding (demultiplexing) the electric signals and for actuating the corresponding subsea valves. Those "control pods" shall be hereafter referred as SCM. To accomplish the demultiplexing, each SCM shall have its own internal electronics and directional (solenoid) control valves.

3.6.9.2 The EHM System requires topside equipment referred hereafter as "Control Cabinets" (or MCS) to provide power for the SCMs and communication between those and the SOS HMIs and CSS. The MCSs (PN-1210001-005A/B) shall be supplied as a pair of racks fitted with a PLC or industrial grade computer servers and special power supplies and modems. The electric communication signal shall be superimposed in the same pair of wires that power the SCMs (so called power line carrier subsystem). Optical communication channels shall be used as well. Each Control Cabinet rack thus provides power and communication for one or more SCM, so two such Cabinets shall provide redundant power and communications for one or more SCM networks. The two matched Control Cabinet racks shall be referred as "Channel A or 1" and "Channel B or 2".

3.6.9.3 The MCSs shall be connected with the main Automation System through the following interfaces:

- Connection with the FPSO PCS system by the Package Unit LAN communications network (CSS), via WCS Cabinet Ethernet Switches;
- Connection with the FPSO PSD system by hardwired (PSD) interfaces.

Although the primary (main) means of operator's interface with the EHM System shall be through the SOS HMIs, a given number of Control Cabinet pairs shall be also connected to a dedicated Operator Workstation provided by BUYER. These dedicated Operator Workstations (OWS) shall allow the operation of the subsea equipment fitted with EHM System, independently of the SOS HMIs, when necessary. These dedicated OWS shall also allow the operation of

intelligent completion systems that shall be fitted to some production wells. A Control Cabinet pair shall also have a dedicated Engineering Workstation (EWS) for internal configuration and display of "housekeeping" parameters not related to the control application.

3.6.9.4 A typical subsea Wet Christmas Tree with EHM System (referred thereafter as WCT-MUX) shall have its own SCM fitted to the WCT itself. If this WCT-MUX is installed in a Satellite Well, it shall be connected directly to the FPSO through a "multiplex-type" control umbilical. Otherwise, if this WCT-MUX is connected to a subsea manifold, the WCT-MUX SCM shall typically share (use) the same electric and hydraulic network of the manifold SCMs through the manifold "multiplex-type" control umbilical connected to the FPSO. Each subsea manifold (either for production, water & gas injection) shall usually have an EHM System fitted, typically with one or more SCM installed in the manifold itself for its own control and monitoring functions.

3.6.9.5 To provide interconnection between signals from wellheads to MCS Panels, CI-E / DHSV-E Panels, rearrangement panels shall be supplied. These panels (PN-1210016A/B) are called "Topsides Electrical Assignment Panel (TEAP)".

3.6.10 SPCS sizing

3.6.10.1 The following types of equipment listed below, from the seabed to the Unit, comprise the EHM System part of the SPCS:

- Wet Christmas Tree with EHM System (WCT-MUX) for WAG injection, PWAG and production wells;
- Umbilicals for EHM System (and their interconnections);
- Rearrangement panel (Topsides Electrical Assignment Panel – TEAP);
- Control Cabinets for EHM System;
- Control Cabinets Operation Workstation for EHM System;
- Hydraulic Power Unit (UH-1210001).

3.6.10.2 The following types of equipment listed below, from the seabed to the Unit, comprise the Direct Hydraulic Control System part of the SPCS:

- Wet Christmas Tree with Direct Hydraulic Control System (hereafter referred as WCT-HD);
- Umbilicals for Direct Hydraulic Control System;
- Signal Acquisition System (SAS) for WCT-HD;
- Well Control Racks (WCR) for WCT-HD and SESDV;
- Hydraulic Power Unit (UH-1210001).

3.6.10.3 1 (one) Hydraulic Power Unit (see I-ET-3000.00-5139-800-PEK-004 - HYDRAULIC POWER UNIT FOR SUBSEA EQUIPMENT WITH MULTIPLEXED ELECTROHYDRAULIC AND DIRECT HYDRAULIC CONTROL SYSTEM (OWN FLOATING PRODUCTION UNIT)) for water-based control fluid shall be provided to supply both the EHM System and the Direct Hydraulic Control System;

3.6.10.4 The default quantities of the above equipment that the SPCS shall be able to control is:

- Up to 9 (nine) Satellite Production Wells, each with EHM System (WCT-MUX). Up to 2 (two) of these Satellite Production Wells can have Direct Hydraulic Control System (WCT-HD).
- Up to 7 (seven) pairs of WAG injection wells, each well in each pair with EHM System (WCT-MUX), being one umbilical for both WCT-MUX in the pair;
- Up to 5 (five) satellite production and WAG injection wells, each with EHM System (WCT-MUX).

NOTE 1: Maximum of 4 (four) SESDV valves for Direct Hydraulic Control from the FPSO. The exact quantity shall be confirmed during the Detailed Design Phase.

NOTE 2: The SPCS shall be designed to interface with different types of Control Cabinet pairs according to the subsea EHM System standard. The differences between them shall be the quantity and types of subsea equipment that shall be controlled, or more precisely, the total number of SCMs that can share one or more networks per Cabinet pair. Each control cabinet shall control up to 5 (five) SCMs. The types of control cabinets shall be defined by subsea design.

3.6.10.5 The SPCS shall be designed to provide monitoring and operation of the EHM System part of the SPCS from the FPSO's SOS HMIs in the CCR through a total of 5 (five) pairs of Control Cabinets, total 10 (ten) individual Control Cabinet racks.

3.6.11 SPCS – Umbilical connection

3.6.11.1 All electrical and optical cables shall be routed from each umbilical hang off interface junction boxes to the room(s) where the EHM Control Cabinets, CI-E and DHSV-E Control Cabinets and the WCS Cabinet will be located.

3.6.11.2 It shall be provided two electrical junction boxes next to each umbilical top connector. One shall be used for the EHM and CI-E / DHSV-E and the other for the WCT-HD instrumentation. Both junction boxes shall be certified according to hazardous area classification. JBs and local panels located in Topsides non hazardous open areas shall be certified to operate in Zone 2, Group IIA, T3 hazardous areas.

3.6.11.3 The subsea umbilical's electrical pig-tails are typically 800mm long. The junction box shall be removable to make room during the pull-in/pull-out procedures.

3.6.11.4 It shall be used cables between each junction box and the respective EHM Control Cabinets, CI-E / DHSV-E Control Cabinet and the WCS Cabinet according to I-ET-3010.2D-1200-800-P4X-005 – FIELD INSTRUMENTATION and I-ET-3010.00-1200-800-P4X-013 – GENERAL CRITERIA FOR INSTRUMENTATION PROJECTS. Cables for EHM and CI-E / DHSV-E shall be composed of individually shielded and twisted pairs of 6.0mm^2 conductor cross section. Junction boxes shall have individual ground terminals.

3.6.11.5 It shall be provided an optical junction box for two optical cables next to each umbilical top connector. The optical junction box shall be certified according to hazardous area classification.

3.6.11.6 BUYER will provide the length of each optical cable pig-tail during the detail design phase. The optical junction box shall be removable to make room during the pull-in/pull-out procedures.

3.6.11.7 The umbilicals shall be used not only for hydraulic functions for the subsea valves, but also they shall be used for chemical injections, electrical power supply for electronics devices, and signal data acquisition from Wet Christmas Tree (WCT).

3.6.11.8 It shall be foreseen two Pressure Gauges rated to 12,000 psi for testing the umbilicals during commissioning.

3.6.11.9 For requirements regarding the TUTU plates, refer to I-ET-3A40.03-1350-940-P56-001 - FPSO STRUCTURES AND FACILITIES FOR RISER SYSTEM and I-ET-3A50.00-1350-940-P56-001 - FPSO STRUCTURES AND FACILITIES FOR RISER SYSTEM, in accordance with the field to where the unit is destined to.

3.6.12 MCS Related Requirements and Characteristics

3.6.12.1 The MCS Control Cabinets shall be provided by BUYER.

3.6.12.2 Each MCS control cabinet shall have bottom cable access. Each MCS control cabinet shall also have back and frontal accesses.

3.6.12.3 Each Control Cabinet rack shall be based on 19” type standard.

3.6.12.4 The SPCS shall be designed to allow the interface of Control Cabinets from different Suppliers, in any combination according with number and types of Control Cabinets.

3.6.12.5 All Control Cabinets (PN-1210001 ~ 005 A/B) shall be located at AEPR, with air conditioning ambiance. Panels shall be adequate for temperatures described at I-ET-3010.2D-1200-800-P4X-001 – INSTRUMENTATION ADDITIONAL TECHNICAL REQUIREMENTS.

3.6.12.6 Control Cabinet room(s) layout shall also be designed to allow changing the interconnections between each umbilical electrical and optical cables and all EHM and CI-E / DHSV-E Control Cabinets and the WCS Cabinet, according to different well completion and WCT types to be operated during the Contract lifetime.

3.6.12.7 The SPCS shall be designed to allow the installation of the Control Cabinets during the construction phase and integration of FPSO or during offshore operation of the UNIT. AEPR (module 17) layout (ex.: access for installation of MCSs and CI-E / DHSV-E inside module) and SPCS communications network connections and electrical power supply shall be designed to permit this

installation during offshore operation. The cable way design and routing inside M-17 Module for cables from Riser Balcony to MCS and CI-E / DHSV-E Panels shall foresee the possibility of interconnection of any cable to any MCS and CI-E / DHSV-E during production unit lifetime through TEAP panel (PN-1210016A/B).

3.6.12.8 Each pair of control cabinet shall be fed according to I-ET-3010.00-5140-700-P4X-003 – ELECTRICAL REQUIREMENTS FOR PACKAGES FOR OFFSHORE UNITS. Whenever necessary, power converters and AC/DC stabilized power supplies shall be included in the panel in order to make all appropriate conversions between the power supplied by the Electrical System and the panel's internal components power requirements.

3.6.12.9 For more details regarding MCS, see I-ET-3000.00-1516-823-PEK-060 - SUBSEA PRODUCTION CONTROL SYSTEM FOR FPSO.

3.6.13 Direct Hydraulic Control - Interfaces

3.6.13.1 The SPCS shall be designed to provide monitoring and operation of the Direct Hydraulic Control System part of the SPCS from the FPSO's SOS HMIs in the CCR through the OWSs.

3.6.13.2 PSD shall be in charge of generating commands to the Production Well Control Rack Direct Hydraulic (PN-1210008) in order to permit that all Christmas Trees valves and VHIF-I valves are operated and monitored from CSS HMIs.

3.6.13.3 The WCT-HD shall be direct hydraulically controlled from Production Well Control Rack (PN-1210008) installed on the FPSO. The gas pipeline emergency valve (SESDV) shall be direct hydraulically controlled from SESDV Control Rack (PN-1210009). These racks shall be electrically interconnected to a CSS Remote I/O Panel, located near the racks. The hydraulic fluid shall be provided by the common Hydraulic Power Unit for Subsea System (UH-1210001).

3.6.13.4 Opening/closing logic sequences for the WCRs valves shall be carried out by PSD. The same occurs for the gas pipeline SESDV.

NOTE: The production choke valves shall be in the topside of platform and shall be operated by CSS.

3.6.14 Supervision and HMIs of the SPCS

3.6.14.1 4 (four) dedicated Operating Workstations for the EHM System part of the SPCS (PN-1210010A/B/C/D) shall be installed at CCR. Specifications of the cables and connectors between the Control Cabinets and the OWS shall be provided by BUYER during the Detail Design Phase.

3.6.14.2 The SPCS shall be operated from Subsea Operation Workstations (OWS), PN-1210010A/B/C/D, and SOS HMIs, using dedicated screens and pop-up menus. As a preliminary requirement, the following screens shall be implemented as an intuitive way of navigating through the system in a logical manner as the main building blocks are connected:

- WCT-MUX, according to its function (Production Satellite well, production/WAG Satellite well, WAG satellite wells in piggyback).
- WCT-HD.
- HPU monitoring.
- Configuration of a Production Satellite Well to WAG-Injection Well.

3.6.14.3 The wells with Intelligent Completion (CI-HD) shall have IC equipment including the PDG and other downhole instrumentation monitored and operated from the EHM System dedicated Operation Workstations.

3.6.14.4 The PDG and TPT-AR installed at the satellite production wells shall be connected to the SAS. It shall be possible to monitor and supervise the satellite production and water injection wells variables from SOS HMIs.

3.6.14.5 Each OWS shall be powered as according to I-ET-3010.00-5140-700-P4X-003 – ELECTRICAL REQUIREMENTS FOR PACKAGES FOR OFFSHORE UNITS.

3.6.14.6 BUYER shall provide the subsea P&ID for configuration of the HMI screens. The screens of SOS HMIs shall be configured with the same features as the Subsea Operation Workstation.

3.6.14.7 The following minimum information shall be available on screens, from the subsea system WCT-MUX and WCT-HD (where applicable):

- Valve (including downhole valve) open/close;
- Pressures from WCT instruments;
- Temperatures from WCT instruments;
- Downhole pressures;
- Downhole temperatures;
- Intelligent Completion status;
- Corrosion monitor signal from gas pipeline.

3.6.14.8 The following minimum information shall be available on screens, from the subsea system manifolds:

- Valve open/close;
- Pig detection;
- Pressures from manifold instruments;
- Temperatures from manifold instruments;
- Injection flow rates from manifold instruments (water and gas);
- Corrosion monitoring from manifold or pipeline instruments.
- Choke actuation and position feedback.

3.6.14.9 Each type of subsea equipment shall be represented by intuitive building blocks to represent the field layout.

3.6.14.10 The HPU UH-1210001 shall be monitored from the SOS HMIs using dedicated screens and pop-up menus. The reservoirs levels, the pressure at the HPU UH-1210001 outlet headers, the pumps status (on/off) and the pressure of main header (hydraulic pumps outlet), shall be displayed locally and at the SOS HMIs.

3.6.14.11 The SESDVS Control Rack PN-1210009 panel shall be operated from the SOS HMIs using dedicated screens and pop-up menus.

3.6.14.12 The CCR shall monitor if the umbilical lines are pressurized. Pressure switches or pressure transmitters shall be fitted upstream of each umbilical hydraulic line topside interface.

3.6.14.13 It shall be possible for the operator to configure a time delay for the closing and for the opening of each WCT valve. This shall be easily accomplished by simple pop-up menus on the CCR screen at password protected supervisor level. Default values for time delays shall be informed by BUYER.

3.6.14.14 It shall be possible to reconfigure the normal closing sequence of all WCT valves. This shall be easily accomplished by calling special CCR screens under password protected supervisor level. Default sequences shall be informed by BUYER.

3.6.14.15 All SPCS hydraulic lines from the HPU to the respective umbilical hang offs prepared for multiplex umbilical shall be delivered flushed to ISO 4406 class 17/15/12 cleanliness with fluid.

3.6.15 Services related to SPCS

3.6.15.1 The integration between all topside equipment of the SPCS and the Unit shall be provided. This comprises assembly, hook-up, cabling, tubing, junction boxes, etc. required to interface each well control umbilical with the Control Cabinet racks, HPU, Subsea SESDV control panel, and the Unit's systems (SOS, CSS and others).

3.6.15.2 All interfaces shall be submitted to BUYER for approval, as well as the commissioning procedure. The subsea cause and effect chart also shall be submitted for BUYER approval.

3.6.16 Interfaces between MCS and CSS

3.6.16.1 Communication network between each Control Cabinet (MCS) with the FPSO CSS system shall be through Gigabit Ethernet. The communication protocol shall be OPC.

3.6.16.2 Each Control Cabinet rack shall have available 32 (thirty two) digital inputs (0 - 24 Vdc) for interface with PSD, such as ESDs levels. The exact functions and Cause & Effect Diagram shall be agreed together with BUYER during the Detailed Design Phase.

3.6.16.3 Each MCS panel that controls a satellite production well shall have available 40 (forty) digital output signals (8 per well) for interface with CSS-PSD and CSS-FGS, such as ESD-1/2/3/4.

3.6.16.4 . Each MCS panel that controls a pair of WAG wells in piggyback configuration shall have available 64 (sixty-four) digital output signals (16 per pair of wells in piggyback) for interface with CSS-PSD and CSS-FGS, such as ESD-1/2/3/4.

3.6.16.5 . Each MCS panel that controls a satellite production/WAG well shall have available 24 (twenty-four) digital output signals (8 per well) for interface with CSS-PSD and CSS-FGS, such as ESD-1/2/3/4.

3.6.16.6 For further details, see table 1 on Annex.

3.6.17 Portable Umbilical Pressurization System (PUPS)

3.6.17.1 PUPS is a topside portable device to safely pressurize each control line of an umbilical during installation, from any LP or HP pressure supply from the HPU. Each PUPS shall allow for quick air removal and safe pressurization/depressurization of up to twelve (12) umbilical tubings or thermoplastic hoses from one or two topside umbilical termination unit connection lines.

NOTE 1: PUPS shall be used for CONTROL line pressurization only, with water-based control fluids MacDermid HW443, MacDermid HW525P or Castrol Transaqua DW to be maintained to ISO 4406 Class 17/15/12 cleanliness.

3.6.17.2 Each PUPS shall be composed of two identical hydraulic headers, each one with a common pressure inlet port, a pressure regulator, manometer, 6 (six) function branch outlet ports and one drain port to drain/bleed any of the 6 outlets. Each drain and outlet port, as well as each manometer shall have their own isolating valve. All components shall be stainless steel type with at least ½" O.D. suitable for the above said control fluid and fluid cleanliness. The drain/bleed ports shall be used also to take fluid sampling when necessary.

3.6.17.3 The PUPS shall be able to pressurize each umbilical line with a regulated hydraulic pressure between 1,000 psi to 5,000 psi. The PUPS shall be powered from instrument air supply available in the unit. However, all PUPS hydraulic components shall be rated to 10,000 psi operation.

3.6.17.4 Each of the 12 (twelve) pressurization outlets shall be terminated with a quick connector adapter to allow the fitting of a ½" or 3/8" male JIC 37° termination prior the pressurization. Each PUPS shall be provided with sets of at least 13x 3/8" and 5x ½" male JIC 37° fittings. It shall be considered to provide each PUPS with its own storage box for those fittings when not in use. Two such PUPS shall be supplied.

3.6.17.5 PUPS shall be designed to operate next to the subsea umbilicals and Local Panels (for riser support actuation system). Hydraulic jumper sets shall be used to connect PUPS at umbilical endfiting (subsea umbilical) or Local Panel (hullside umbilical). PUPS operation location shall be with easy access for operators and with all air/electrical supply facilities required to operate.

3.6.17.6 PUPS shall be designed in accordance with its corresponding area classification where it will be operated.

3.6.17.7 The PUPS documentation shall include at least the following:

- Mechanical drawings for all individually delivered assemblies;

- Datasheets, manuals and certificates for every equipment/instrument when applicable, covering operation, maintenance and installation guidelines;
- Calibration reports and certificates for every sensor;
- Detailed system arrangement, including but not limited to, hydraulic diagrams, cable layout and equipment interconnection diagrams;
- As-built drawings, when applicable;
- Detailed installation/handling/storage procedures;
- Detailed test and commissioning procedures and reports;
- System operation and maintenance manuals.

3.7 Compression Capacity Control (CCC) System

3.7.1 In case of changes in the operation setpoints of the compressors, the compression control system of each train shall be capable of setting automatically the proper compressor control parameters in accordance with the new operation setpoints. The parameters shall be set in order to avoid compressor recycle, to reduce plant pressure fluctuations and to avoid unnecessary gas flaring, when a plant upset or downstream process unit shutdown occurs. This functionality shall be designed using the communication network among the Master Controllers (Compression Capacity Control).

3.7.2 As described in I-ET-3010.2D-1200-320-P4X-101 - CENTRIFUGAL GAS MOTOCOMPRESSORS PACKAGE SPECIFICATION, compressors PACKAGER will provide an additional system based in a computer system Compression Capacity Control System Workstation (PN-5500010A/D) connected directly to anti-surge, capacity and load sharing controllers with dedicated serial RS485 for each train. PN-5500010A/D shall be suitable for mounting in a 19” rack. PN-5500010A/D shall also be accessed onshore via jump host in DMZ.

3.8 Plant Information® (PI)

3.8.1 The operational data of the UNIT shall be sent to BUYER corporate Network through Plant Information® software (PI), from OsiSoft.

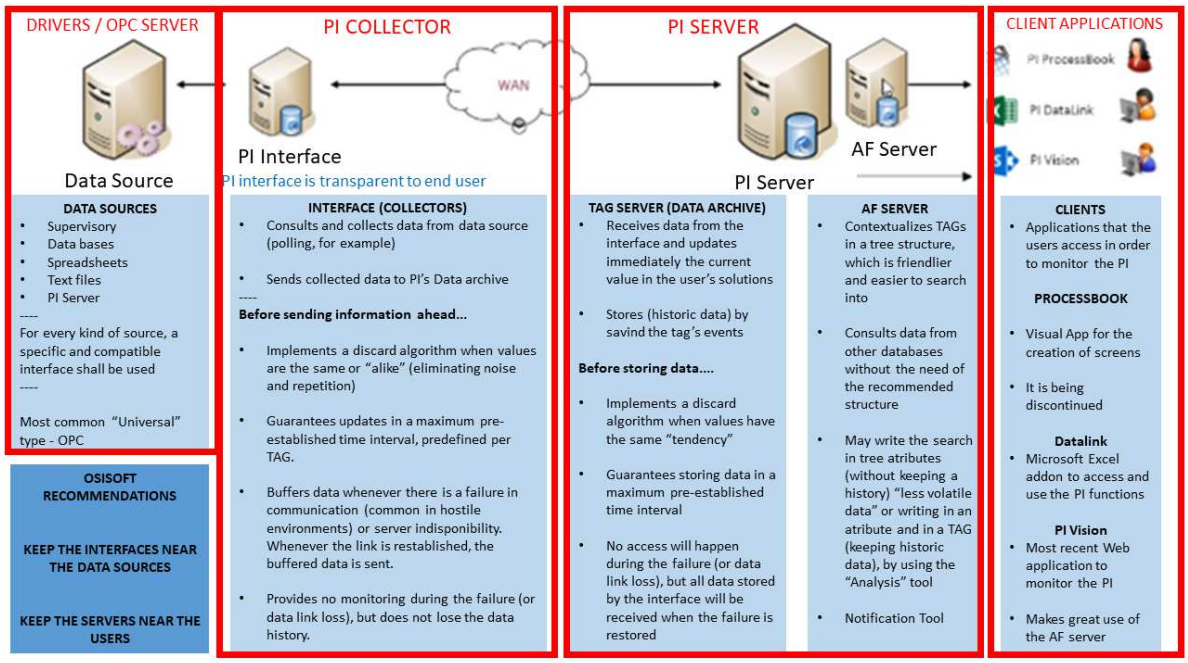

Figure 3-1 – PI Main modules (in blue/black) and the generic name this document will use to refer to them (in red, in the top of the image)

3.8.2 PI is a modular software, as shown in Figure 3-1. Among the several modules required for it to work, there are:

- OPC drivers / OPC servers
  - These components are installed in the Data Sources (i.e., supervisory systems servers) with data that is meant to be sent to onshore applications
  - They make system data available for the PI Collectors
- PI Collectors
  - PI Collectors is a generic name for PI Interfaces, PI Adaptors and PI Connectors
  - PI Collectors are responsible for:
    - Grabbing data from OPC drivers / OPC servers through polling techniques,
    - Transforming data from OPC into PI proprietary protocol,
    - Sending data to PI Servers
  - There are several types of PI Collectors. The type of PI collectors to be used may depend on the data source system manufacturer.
- PI Server
  - The PI database itself (subdivided into Data archive and AF server)
  - The PI server is under BUYER Scope
  - SELLER is responsible for the configuration of TAGS in the PI SERVER
- Client application
  - The applications that consume data from the PI server
  - Client applications are under BUYER Scope

3.8.3 In order to configure PI to send data from the Automation network to onshore applications, the following architecture shall be followed:

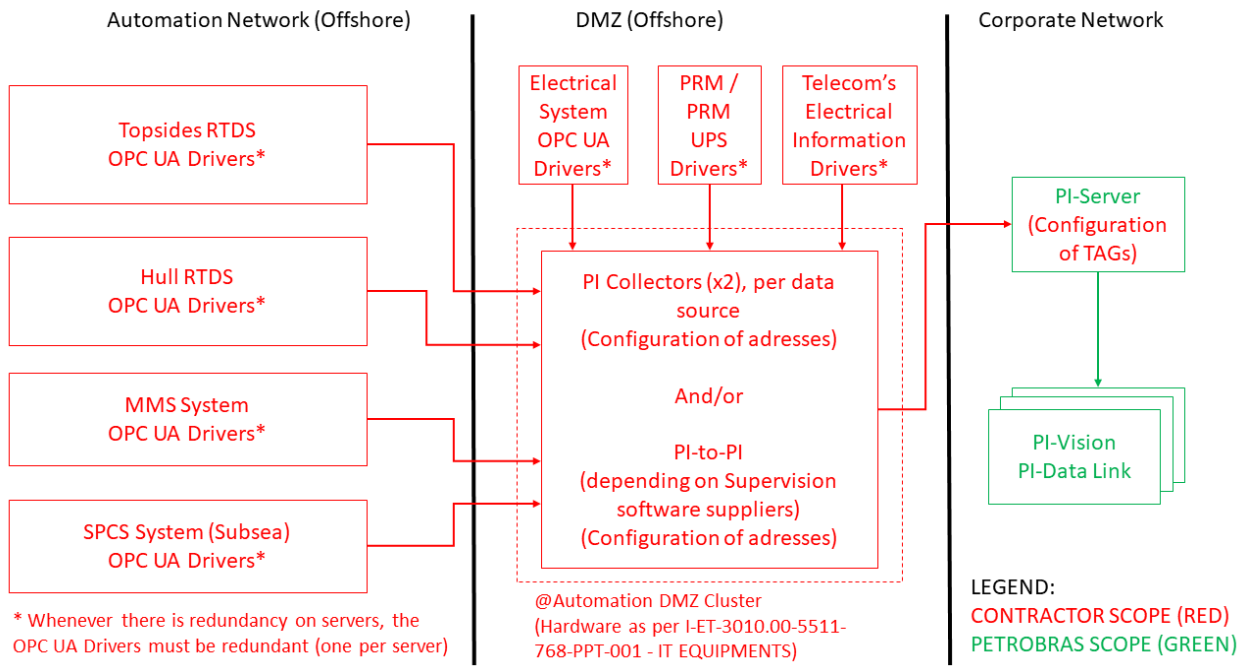

Figure 3-2 – PI architecture

3.8.4 Regarding Licenses:

3.8.4.1 As seen in Figure 3-2, at least the following PI licenses are required (quantities of licenses shall be confirmed by SELLER in liaison with OSIsoft and during detail engineering design):

- Redundant OPC Driver licenses (Quantity and type to be confirmed during detail design). Whenever the data source servers are redundant, then the OPC drivers shall be redundant, i.e., one per server;
- Redundant Licenses of PI Collector (PI Interfaces) for OPC-UA;
- Licenses of PI – to – PI (may be necessary, depending on Supervision software suppliers);

3.8.4.2 All PI drivers, interfaces and servers shall be properly licensed.

3.8.4.3 Licenses shall be acquired by SELLER under BUYER's name, so that maintenance for the licenses may be done by BUYER during operation phase. SELLER shall liaise with OSISoft and BUYER in order to verify the possibility of updating the OSISoft <-> BUYER contract with the new licenses (PI-to-PI licenses and PI Collector licenses).

3.8.4.4 Software PI licenses shall be acquired in the most recent version available by OSISoft during comissioning phase.

3.8.4.5 All OPC drivers shall also be properly licensed.

3.8.5 Regarding OPC Drivers:

3.8.5.1 Standardized drivers shall be supplied and properly licensed to make data from the following systems available via OPC:

- Hull Real Time Data Servers virtual images (HCS, HSD, HFGS, Hull Packages)
- Topsides Real Time Data Servers virtual images (PCS, PSD, FGS, Topsides Packages)
- Z-PN-5140002-04A/B - TOPSIDE ELECTRICAL SYSTEM AUTOMATION DMZ SERVER (this machine sends data from the Electrical System to PI)
- SPCS equipment
- MMS servers
- PRM / PRM UPS data server

3.8.5.2 The chosen standardized driver shall be chosen in liaison with OSISoft and with each of these system suppliers, in order to ensure compatibility.

3.8.6 Additional information and services:

3.8.6.1 Telecom panel's voltage, current and power shall be available at PI system for onshore monitoring. In order to do so, redundant Modbus PI Collectors shall be provided at Automation DMZ server in order to reroute the information from telecom Panels to PI server. If necessary, Modbus drivers for publishing Telecom's electrical panels voltage, current and power shall also be provided.

3.8.6.2 Other OPC Drivers and PI Collectors may be required, according to project needs. In case they exist, these additional OPC Drivers and PI Collectors are also SELLER's scope of supply. Supplying all licenses, installation of the software, configuration and testing of all PI related machines and OPC Drivers shall be performed by SELLER. The configuration of OPC drivers and PI Collectors shall be performed by SELLER. This includes, for example, the configuration of addresses in PI Collectors in order to point them to the onshore PI Server.

3.8.6.3 The configuration of the TAGs in the PI Server shall be performed by SELLER. This will be accomplished by delivering a spreadsheet with PI TAGs information. SELLER shall ask BUYER for the spreadsheet template during PI configuration.

3.8.6.4 See also document I-DE-3010.2D-5520-800-P4X-004 – NETWORK INTERCONNECTION DIAGRAM, for the representation of OPC drivers for PI and PI Collectors.

3.9 Asset Management System (AMS)

3.9.1 For Requirements regarding AMS, refer to I-ET-3010.00-1200-850-P4X-002 – ASSET MANAGEMENT SYSTEM (AMS).

3.10 Hull Structural Tanks Level, Interface, Pressure And Temperature Monitoring Systems (HSTS)

3.10.1 For Requirements regarding HSTS, refer to I-ET-3010.2E-1351-800-P4X-001 – HULL STRUCTURAL TANKS LEVEL, INTERFACE, PRESSURE AND TEMPERATURE MONITORING SYSTEMS.

3.11 Hull Structural Integrity Digital Twin (HSHMS)

3.11.1 Hull Structural Integrity Digital Twin, also known as HULL STRUCTURE HEALTH MONITORING SYSTEM PANEL (HSHMS) is referred to as “Tension Monitoring system” in Telecom documentation. See I-ET-3010.00-1351-140-P4X-002 - DIGITAL TWIN FOR HULL STRUCTURAL INTEGRITY MANAGEMENT.

3.11.2 Details of Hull structure monitoring system and its correct interconnections shall be included both in Telecom scope of supply (and Telecom documents) and in Automation scope of supply (Automation documents).

3.11.3 HSHMS shall be placed logically in the DMZ, which allows it to consume data from Metocean Systems, and Navigation systems directly through DMZ switches (Telecom scope).

3.11.4 Loadmaster system is installed in PN-1358503 - STABILITY AND LOAD CALCULATION WORKSTATION. Therefore, in order to make Loadmaster system logically accessible to HSHMS, the following connections have been foreseen:

3.11.4.1 PN-1358503 - STABILITY AND LOAD CALCULATION WORKSTATION shall be acquired with an additional network card. SELLER shall liaise with Hull Structural Tanks Level, Interface, Pressure System (HSTS System) SUPPLIER in order to allow this additional network connection in PN-1358503 workstation.

3.11.4.2 PN-1358503 - STABILITY AND LOAD CALCULATION WORKSTATION shall also be connected to Package Unit LAN, so that its data reaches the firewall. Physical connections shall be provided and installed in order to do so.

3.11.4.3 Firewall rules shall be configured in FW-5517501/502 – TELECOM FIREWALLs in order to allow data to flow from / to PN-1358503 - STABILITY AND LOAD CALCULATION WORKSTATION and from / to PN-1358510 HULL STRUCTURE HEALTH MONITORING SYSTEM PANEL.

3.12 Riser Annulus Pressure Monitoring System

3.12.1 See I-ET-3010.00-5529-812-PAZ-001 – ANNULUS PRESSURE MONITORING AND RELIEF SYSTEM.

3.13 Topsides Umbilical Terminal Units (TUTUs)

3.13.1 Several P&IDs of system 1210 show Topsides Umbilical Terminal Units (TUTU). The TUTUs are a set of equipment placed in the Topsides of the unit, whose objective is to make the connection between Topsides facilities / lines and the subsea umbilical lines.

3.13.2 The TUTUs have not been represented in equipment list because they do not have a TAG associated during basic design. Regardless of this fact, TUTU supply, installation and interconnection are under SELLER scope of supply.

3.14 Control and Monitoring System for Riser Supports

3.14.1 TSUDL and BSDL supports shall have a control and monitoring system. For this system, see the document list below:

I-ET-3010.00-1300-850-PEK-001	CONTROL AND MONITORING SYSTEM FOR RISER SUPPORTS
I-DE-3010.00-1300-850-PEK-001	RISER SUPPORT P&ID
I-ET-3010.00-1300-850-PEK-002	HULLSIDE UMBILICAL FOR RISER SYSTEMS
I-DE-3000.00-5520-850-PEK-001	BLOCK DIAGRAM – SUBSEA MONITORING SYSTEMS
I-ET-3010.00-1519-140-P56-001	UNIFIED DIVERLESS SUPPORT TUBE
I-LI-3010.00-1300-270-P56-001	UNIFIED DIVERLESS SUPPORT TUBE (TSUDL) PARTS LIST
I-ET-3010.00-1300-279-PEK-002	5K HYDRAULIC ACTUATOR FOR BSDL / DIVERLESS BELL MOUTH
I-DE-3010.00-1300-279-PEK-003	5K HYDRAULIC ACTUATOR ASSEMBLY FOR BSDL
I-ET-3010.00-1300-279-PEK-003	MTL MATERIAL AND MANUFACTURING TECHNICAL SPECIFICATION
I-DE-3010.00-1300-270-P56-001	LATERAL SUPPORT MODULE - MTL

3.15 SESDV Monitoring System

3.15.1 SELLER shall provide the TOPSIDE structure needed to SESDV (Subsea Emergency Shutdown Valve) Monitoring System. For Technical Specification see I-ET-3000.00-1510-854-PEK-002 - MONITORING SYSTEM FOR SUBSEA EMERGENCY SHUT-DOWN VALVE (SESDV) – FPU SCOPE.

3.16 Architecture Doors Connection to CSS/SOS

3.16.1 Some doors have associated limit switches or magnetic door holders in order to perform logics in certain conditions. There are two categories of doors that have associated instrumentation. They are:

- Doors containing magnetic hold back device with Central Control Room release:
  - These doors are present in:
    - Stairways,
    - Cabins,
    - Mess room,
    - Dry storage rooms.
  - These doors have a magnetic hold back device, which is released by either by operator screen commands in SOS (one command per deck), fire alarm, or by a local latching pushbutton (one per door).

- Door Normal Condition: Magnetic hold back device remains energized, so that, if the door is manually fully opened, it is kept locked open. This is meant to ease access of people or cleaning carts to certain areas.
- Door Alarm condition: Magnetic hold back device is de-energized, so that the door is released to automatically close using a spring. This is meant to prevent smoke from entering these areas.
- A typical schematic of the magnetic door holder is presented in figure below:

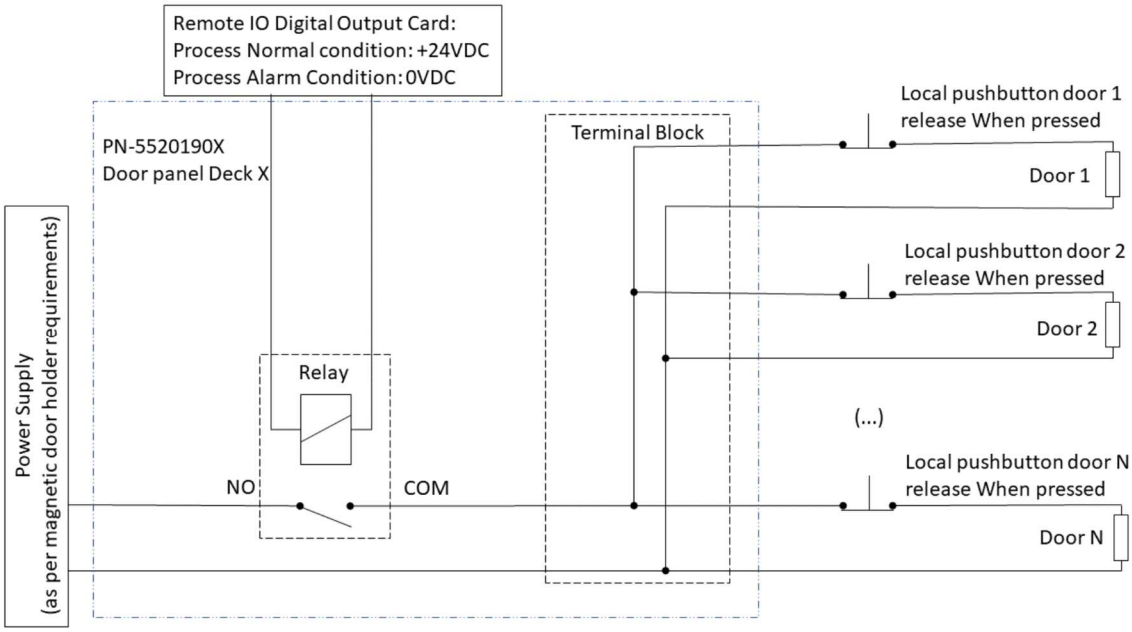

Figure 3-3 - Typical schematic for doors containing magnetic hold back device with CCR release

- Doors with associated open door limit switch and alarm:
  - These doors are present in (or are these types of doors):
    - Corridors,
    - Emergency rooms (which are class 1 rooms as per DR-ENGP-M-I-1.3 – SAFETY ENGINEERING GUIDELINE),
    - Watertight doors,
    - Weathertight doors (SELLER shall check with classification society if weathertight doors should receive open door alarm during detail design),
    - Rooms containing water mist system,
    - Gas tight doors.
  - These doors have an associated limit switch in order to indicate and alarm in CCR that they are open. Also, these signals may take part in other logics of the FPSO. For example, water mist fire fighting system only works if the doors are properly closed. Therefore, the door limit switches take part in the water mist discharge.
  - A typical schematic for the door open alarm is presented below:

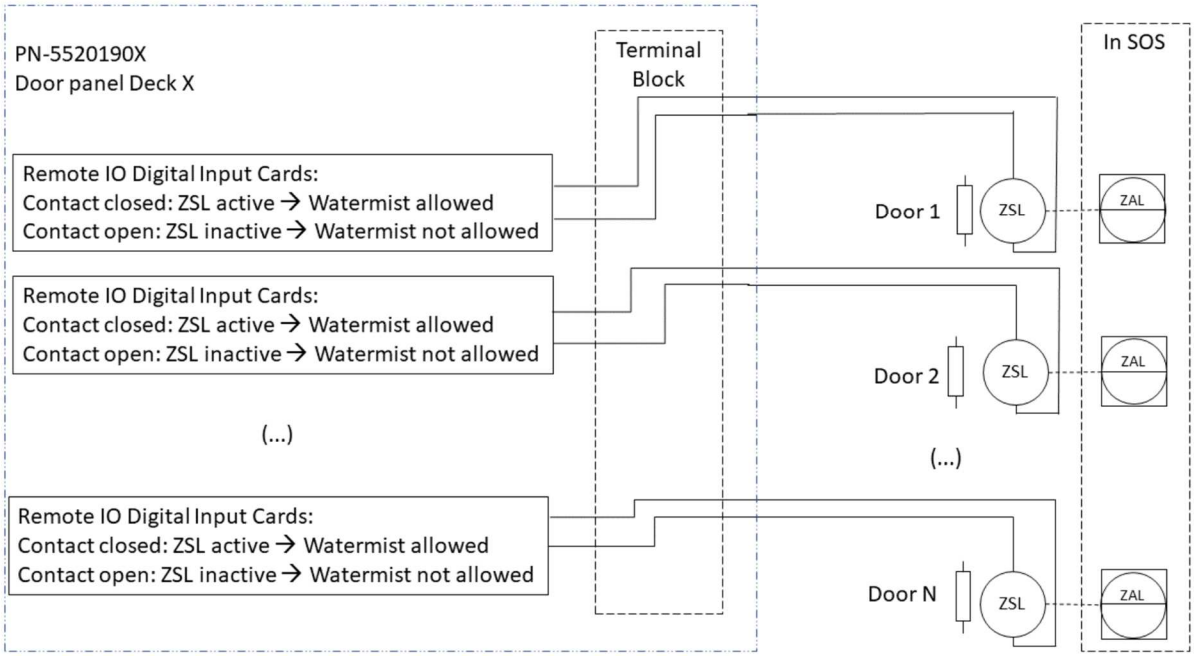

Figure 3-4 - Typical schematic for doors with associated open door limit switch and alarm. Full logics are by detailed design.

3.16.2 In order to quantify the number of doors pertaining to each category, SELLER shall consult Architecture discipline's doors arrangement documents (both from Hull and Topsides) and manually count the doors based on the description of item 3.16.1, based on each environment of the doors (for example, stairway doors), and based on the tables showing the door types (gastight for example).

3.16.3 SELLER shall supply, interconnect, and test one frontal-access-only "door panel" per ambient that has applicable doors (for example, one door panel for Deck C, one door panel for the first elevation of M-17, and so on). Each of these panels shall contain the terminal blocks and relays applicable to that ambient and elevation. This panel shall be as small as possible (a size of a large junction box is desired as maximum size). These panels shall be included in detail engineering design equipment list.

3.16.4 SELLER shall also supply, interconnect and test manual retentive pushbuttons to be installed near every door with magnetic door holder.

3.16.5 I/O points of doors will not be included in Automation basic design documentation and database. However, all door limit switches and magnetic hold back devices shall be connected to CSS/SOS. Any associated logic shall be configured in CSS/SOS. Alarms, and SOS status shall be represented in SOS screens. Commands to door release shall be given from SOS screens. Any associated cables, cable trays, junction boxes, IO cards and other interconnection means needed for these signals shall be supplied by SELLER.

3.16.6 Logics and scope shall be verified/validated with architecture discipline, safety discipline and classification society during detailed engineering design.

4 ANNEX

Table 1 – Minimum I/O Interface Signals of each control cabinet (MCS) –Applicable for satellite Production Wells, Satellite Production/WAG well, and Pair of WAG Wells in piggyback

Signal	Action	I/O Type	PN-121000XA/B
ESD-4	Closure of SCSSVs	DO	1
ESD-3	Close Wing and Master WCT valves	DO	1
ESD-2	Closure of riser surface ESDVs (CSS) Closure of XO and P-XO (MCS)	DO	1
ESD-1	Individual Actuation for each well	DO	10
Total of I/Os per MCS			13