NORMAL 220VAC SYSTEM

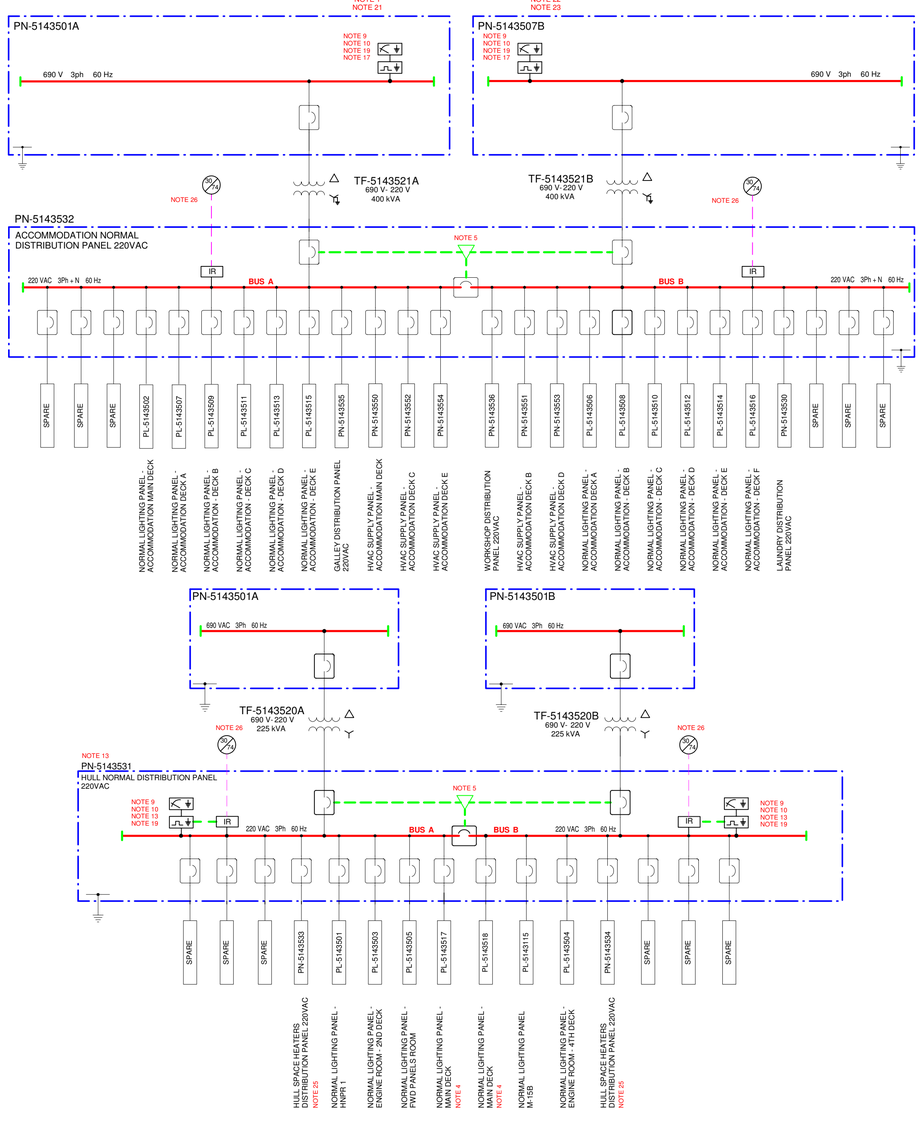

ESSENTIAL 220VAC SYSTEM

NOTE 1
NOTE 22
NOTE 23

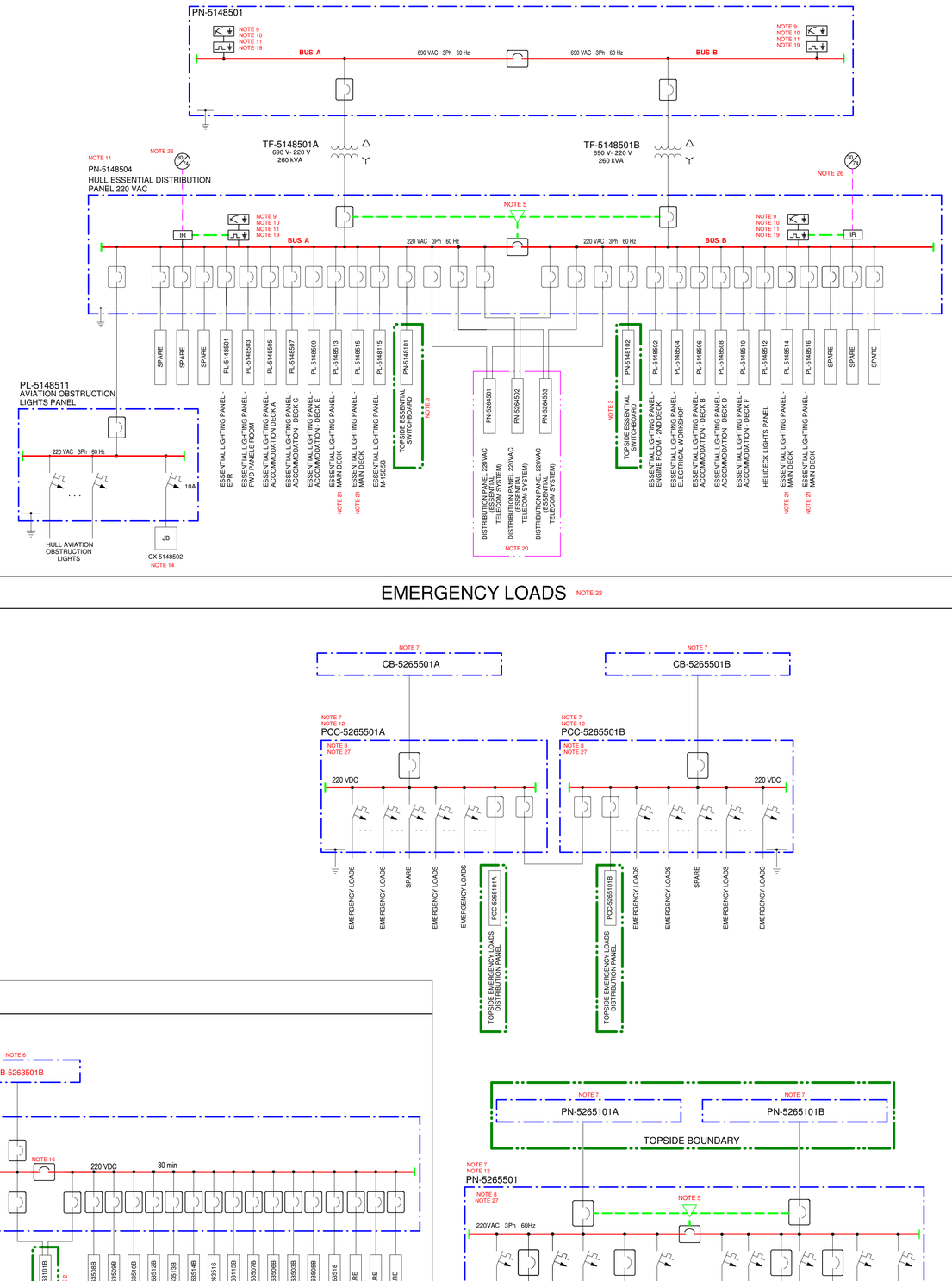

EMERGENCY LOADS

NOTE 22

EMERGENCY LIGHTING SYSTEM - 220VDC

NOTE 1
NOTE 22
NOTE 23

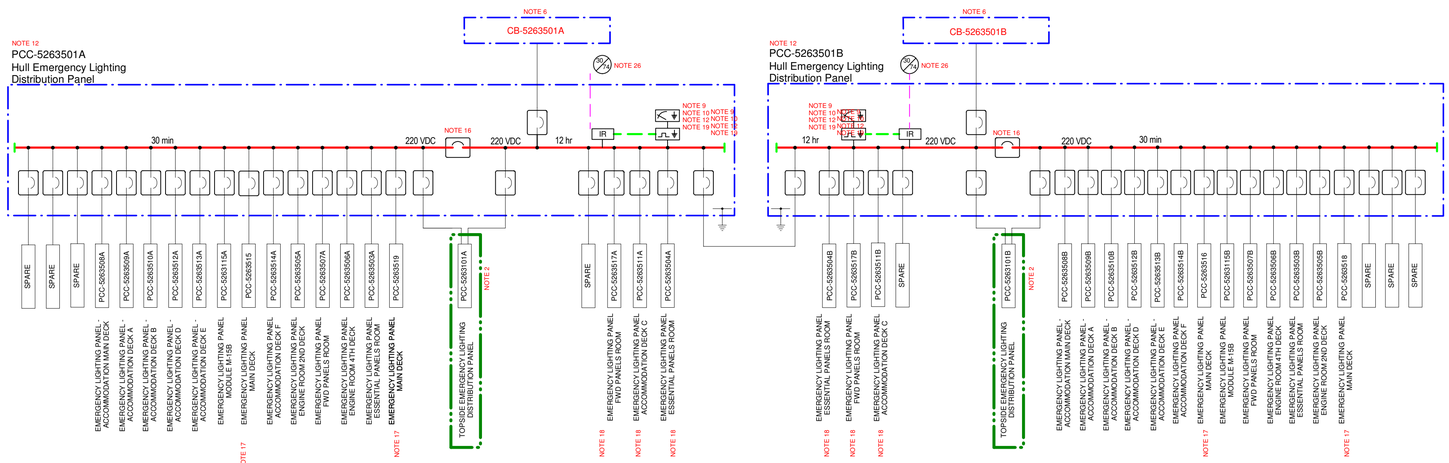

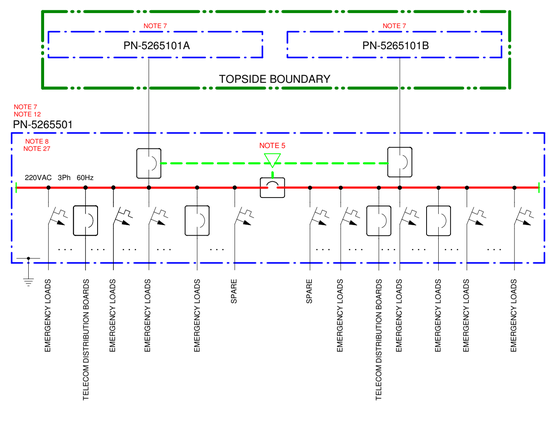

REFERENCE DOCUMENTS

- I-DE-3010.2Q-5140-946-P4X-002 - KEY ONE-LINE DIAGRAM
- I-ET-3000.00-0000-940-P4X-002 - SYMBOLS FOR PRODUCTION UNITS DESIGN
- I-ET-3010.00-5140-700-P4X-003 - ELECTRICAL REQUIREMENTS FOR PACKAGES FOR OFFSHORE UNITS
- I-ET-3010.00-5140-700-P4X-005 - REQUIREMENTS FOR HUMAN ENGINNERING DESIGN FOR ELECTRICAL SYSTEMS OF OFFSHORE UNITS.
- I-DE-3010.00-5140-797-P4X-001 - ELECTRICAL SYSTEM AUTOMATION ARCHITECTURE DIAGRAM
- I-LI-3010.00-5140-797-P4X-001 - ELECTRICAL SYSTEM AUTOMATION INTERFACE SIGNALS LIST
- I-MD-3010.2Q-5140-700-P4X-002 - ELECTRICAL SYSTEM DESCRIPTIVE MEMORANDUM
- I-DE-3010.2Q-5265-946-P4X-001 - TOPSIDES UPS AND DC SYSTEMS ONE-LINE DIAGRAM
- I-DE-3010.2Q-5265-946-P4X-002 - HULL UPS AND DC SYSTEMS ONE-LINE DIAGRAM
- I-LI-3010.2Q-5265-773-P4X-001 - EMERGENCY LOADS LIST
- I-LI-3010.2Q-5140-700-P4X-001 - ELECTRICAL EQUIPMENT LIST
- I-ET-3010.00-5140-741-P4X-004 - SPECIFICATION FOR LOW-VOLTAGE GENERIC ELECTRICAL PANELS FOR OFFSHORE UNITS

GENERAL NOTES AND REQUIREMENTS

1 - THE LIGHTING AND HVAC SUPPLY PANELS SHOWN IN THIS DOCUMENT ARE PRELIMINARY AND WERE DEFINED CONSIDERING THE PREMISE THAT HULL AREAS (ENGINE ROOMS, ACCOMMODATIONS, EXTERNAL AREAS, BOW ROOMS) SHALL BE SUPPLIED WITH THE INTERNAL LIGHTING SYSTEM COMPLETE AND COMMISSIONED. THE FINAL DEFINITION OF THE PANELS SHALL BE ACCORDING TO DETAILED DESIGN.

2 - TOPSIDE EMERGENCY LIGHTING DISTRIBUTION PANELS SHALL RECEIVE FEEDERS FROM 12HR BUSBAR AND 30 MIN. BUSBAR OF HULL EMERGENCY LIGHTING DISTRIBUTION PANELS.

3 - TOPSIDE ESSENTIAL SWITCHBOARDS PN-5148101 AND PN-5148102 SHALL RECEIVE FEEDERS FROM HULL ESSENTIAL DISTRIBUTION PANEL PN-5148504.

4 - NORMAL LIGHTING PANELS LOCATED IN MAIN DECK ARE DESTINATED TO FEED SOCKET-OUTLETS FOR MOORING, LIFEBOATS, RESCUE BOATS, LIFE RAFTS STATION, PULL-IN, DIVING STATIONS, GANGWAY LIGHTING AND TEMPORARY LIGHTING DURING HULL CONSTRUCTION. THE QUANTITY OF PANELS SHALL BE CONFIRMED DURING DETAILED DESIGN.

5 - THIS INTERLOCK SHALL AVOID THAT MORE THAN TWO (2) OF THREE (3) INCOMING AND TIE CIRCUIT-BREAKERS ARE CLOSED SIMULTANEOUSLY.

6 - THIS IS A SIMPLIFIED PRESENTATION OF CB-5263501A/B. FOR DETAILS ABOUT THESE EQUIPMENT, REFER TO I-DE-3010.2Q-5265-946-P4X-002 - HULL UPS AND DC SYSTEMS ONE-LINE DIAGRAM.

7 - THIS IS A SIMPLIFIED PRESENTATION OF CB-5265501A/B, PN-5265501, PN-5265101A/B AND PCC-5265501A/B. FOR DETAILS ABOUTTHESE EQUIPMENT, REFER TO I-DE-3010.2Q-5265-946-P4X-002 - HULL UPS AND DC SYSTEMS ONE-LINE DIAGRAM.

8 - LOADS INSTALLED IN HULL AND FED IN 220VDC AND 220VAC RESPECTIVELY BY CB-5265501A/B AND PN-5265501 ARE NOT PRESENTED IN THIS DIAGRAM. FOR DETAILS ABOUT THESE LOADS, REFER TO I-LI-3010.2Q-5265-773-P4X-001 - EMERGENCY LOADS LIST.

9 - INSULATION MONITORING DEVICES SHALL BE SUITABLY INSTALLED TO ALLOW MONITORING WITH BARS CONNECTED IN ALL POSSIBLE CONFIGURATIONS.

10 - LOW INSULATION SHALL GENERATE AN ALARM SIGNAL TO BE SENT TO HULL ELECTRICAL SYSTEM AUTOMATION PANEL (PN-5140501).

11 - IN ESSENTIAL DISTRIBUTION PANELS:
- FOR REDUNDANT ESSENTIAL LOADS INSTALLED IN HAZARDOUS AREA ZONE 1 OR WHICH CABLES CROSS HAZARDOUS AREA ZONE 1, OUTGOING CIRCUIT-BREAKERS SHALL HAVE INDIVIDUAL GROUND FAULT DETECTOR DEVICES(EFI). IN CASE OF GROUND FAULT DETECTION, EFI SHALL ALARM AND INSTANTANEOUSLY TRIP THE CIRCUIT-BREAKERS.
- OTHER REDUNDANT ESSENTIAL LOADS, ALL NON-REDUNDANT ESSENTIAL LOADS AND DIVING STATIONS SOCKET-OUTLETS SHALL BE GROUPED IN A SAME EFI. IN CASE OF GROUND FAULT DETECTION, EFI SHALL ONLY ALARM.

12 - IN EMERGENCY DISTRIBUTION PANELS:
- FOR REDUNDANT EMERGENCY LOADS INSTALLED IN HAZARDOUS AREA ZONE 1, OUTGOING CIRCUIT-BREAKERS SHALL HAVE INDIVIDUAL GROUND FAULT DETECTOR DEVICES (EFI). IN CASE OF GROUND FAULT DETECTION, EFI SHALL ALARM AND INSTANTANEOUSLY TRIP THE CIRCUIT-BREAKERS.
-OTHER REDUNDANT EMERGENCY LOADS AND NON-REDUNDANT EMERGENCY LOADS SHALL BE GROUPED IN A SAME EFI.IN CASE OF GROUND FAULT DETECTION, EFI SHALL ONLY ALARM.

13 - IN NORMAL DISTRIBUTION PANELS:
- FOR NORMAL LOADS INSTALLED IN HAZARDOUS AREA ZONE 1 OR WHICH CABLES CROSS HAZARDOUS AREA ZONE 1, OUTGOING CIRCUIT-BREAKERS SHALL HAVE INDIVIDUAL GROUND FAULT DETECTOR DEVICES (EFI). IN CASE OF GROUND FAULT DETECTION, EFI SHALL ALARM AND INSTANTANEOUSLY TRIP THE CIRCUIT-BREAKERS.
- OTHER NORMAL LOADS SHALL BE GROUPED IN A SAME EFI. IN CASE OF GROUND FAULT DETECTION EFI SHALL ONLY ALARM.

14 - JUNCTION BOX FOR TOPSIDE AVIATION OBSTRUCTION LIGHTS IS AN INTERFACE POINT FOR FEEDERS FROM PL-5148511 DESTINATED TO TOPSIDE AVIATION OBSTRUCTION LIGHTS.

15 - SIGNALLING AND INSTRUMENTS OF PANELS ARE NOT SHOWED IN THIS DOCUMENT. FOR MORE INFORMATION, REFER TO I-ET-3010.00-5140-700-P4X-005 - REQUIREMENTS FOR HUMAN ENGINEERING DESIGN FOR ELECTRICAL SYSTEMS OF OFFSHORE UNITS.

16 - IN "II" CONFIGURATION CIRCUIT-BREAKER SHALL OPEN AFTER 30 MINUTES OF CONTINUOUS OPERATION WITHOUT 690VAC POWER SUPPLY TO THE CB-5263501A/B, DISCONNECTING PART OF THE EMERGENCY LIGHTING. IN "L" CONFIGURATION, CIRCUIT-BREAKER SHALL OPEN AFTER 30 MINUTES OF CONTINUOUS OPERATION WITHOUT 690VAC POWER SUPPLY TO THE FEEDING PANEL. THE USE OF CONTACTORS INSTEAD OF CIRCUIT-BREAKERS SHALL BE APPROVED BY PETROBRAS.

17 - THESE PANELS SHALL SUPPLY MAIN DECK ESCAPE ROUTES LIGHTING.

18 - THESE PANELS WERE FORESEEN TO SUPPLY CENTRAL CONTROL ROOM, RADIO ROOM, ESSENTIAL PANELS ROOM, EMERGENCY AND AUXILIARIES GENERATORS ROOMS, EMBARKATION STATIONS, MUSTER STATIONS AND ABANDONMENT STATIONS IN HULL AREAS. THE QUANTITY OF PANELS FOR THIS PURPOSE SHALL BE CONFIRMED BY DETAILED DESIGN.

19 - FOR PANELS WITH POSSIBILITY TO OPERATE IN "L" CONFIGURATION WITH INTERCONNECTION CIRCUIT-BREAKERS CLOSED, IT SHALL BE PROVIDED A LOGIC TO DISABLE ONE OF INSULATION MONITORING DEVICES IN THIS CONDITION. IT SHALL ALSO BE PROVIDED A LOGIC TO ENABLE BOTH OF INSULATION MONITORING DEVICES DURING THE RETURN TO "II" CONFIGURATION.

20 - FOR MORE INFORMATION ABOUT THESE EQUIPMENT, REFER TO TELECOMMUNICATION DOCUMENTATION.

21 - THESE PANELS SUPPLY ESSENTIAL LIGHTING OF THE MOORING, LIFEBOATS, RESCUE BOATS, LIFE RAFTS STATIONS, PULL-IN AND DIVING STATIONS. THE QUANTITY OF THESE PANELS SHALL BE CONFIRMED DURING DETAILED DESIGN.

22 - ALL INCOMING AND OUTGOING CIRCUIT-BREAKERS OF NORMAL 220VAC DISTRIBUTION PANELS (PN-5143531 AND PN-5143532) AND THE OUTGOING CIRCUIT-BREAKERS THAT FEED HVAC ESSENTIAL LOADS SHALL HAVE SHUNT TRIP COILS FOR EMERGENCY SHUTDOWN (ESD) PURPOSE. OTHER CIRCUIT-BREAKERS OF ESSENTIAL AND EMERGENCY 220VAC DISTRIBUTION PANELS SHALL NOT HAVE SHUNT TRIP COILS.

23 - DESCRIPTION OF LIGHTING PANELS IS RELATED TO PANEL LOCATION AND SURROUNDING AREAS AND NOT RELATED TO AREA SERVED BY LIGHTING CIRCUITS. DISTRIBUTION OF LIGHTING CIRCUITS SHALL BE ANALYZED DURING DETAILED DESIGN.

24 - PANELS AND CIRCUIT-BREAKERS RATED CURRENT SHALL BE DEFINED DURING DETAILED DESIGN.

25 - ALL ESD SIGNALS TRIGGERED BY FIRE OR GAS DETECTION SHALL TRIP OUTGOING CIRCUIT-BREAKERS OF HULL NORMAL DISTRIBUTION PANEL (PN-5143531) SUPPLYING HULL SPACE HEATER PANELS (PN-5143533 AND PN-5143534), IN ORDER TO AVOID NECESSITY OF INDIVIDUAL CONTROL OF THESE CIRCUITS IN EACH LOAD.

26 - ALL SIGNALS SENT TO A&C SHALL BE THROUGH HULL ELECTRICAL SYSTEM AUTOMATION CONTROLLERS. THIS DOCUMENT DOES NOT CONTAIN ALL SIGNALS BETWEEN EQUIPMENT AND HULL ELECTRICAL SYSTEM AUTOMATION - FOR MORE INFORMATION REFER TO I-DE-3010.00-5140-797-P4X-001 - ELECTRICAL SYSTEM AUTOMATION ARCHITECTURE DIAGRAM, I-LI-3010.00-5140-797-P4X-001 - ELECTRICAL SYSTEM AUTOMATION INTERFACE SIGNALS LIST AND I-ET-3010.00-5140-700-P4X-005 - REQUIREMENTS FOR HUMAN ENGINEERING DESIGN FOR ELECTRICAL SYSTEMS OF OFFSHORE UNITS.

27 - THE QUANTITY OF SPARE OUTGOING CIRCUIT-BREAKERS SHALL BE ACCORDING TO I-ET-3010.00-5140-741-P4X-004 - SPECIFICATION FOR LOW-VOLTAGE GENERIC ELECTRICAL PANELS FOR OFFSHORE UNITS.

28 - HVAC LOADS IN 220VAC IN DECK A AND IN DECK F SHALL BE FED FROM LIGHTING PANELS OF THESE DECKS, OR FROM HVAC SUPPLY PANELS OF ADJACENT DECKS.

29 - EMERGENCY LIGHTING WITH 30MIN AUTONOMY IN DECK C SHALL BE SUPPLIED FROM EMERGENCY LIGHTING PANELS OF ADJACENT DECKS (B OR D).

30 - INTELLIGENT RELAYS SHALL BE SUPPLIED BY DISTRIBUTION PANEL THROUGH A 2 POSITIONS SWITCH.

HOLD POINTS

1 - REPRESENTATION OF INVERTERS DOWNSSTREAM PCC-5265501A/B.

LEGEND

- BOUNDARY LINE BETWEEN HULL AND TOPSIDE
- EQUIPMENT BOUNDARY.
- TELECOMMUNICATION EQUIPMENT
- GENERIC NETWORK COMMUNICATION
- HARDWIRED COMMUNICATION
- IR — INTELLIGENT RELAY

REV.	DESCRIPTION	DATE	EXEC.	CHECK	APPROV.
0	Original issue.	Dec/28/23	U4QR	UR6X	UQBE

THE INFORMATION CONTAINED IN THIS DOCUMENT IS PETROBRAS PROPERTY AND MAY NOT BE USED FOR PURPOSES OTHER THAN THOSE SPECIFICALLY INDICATED HEREIN.
THIS FORM IS PART OF STANDARD PETROBRAS N-381 REV.J ANNEX A - FIGURE A.9.

Smart Electrical 2019 / I-DE-3010.2Q-5140-946-P4X-004

PETROBRAS | SRGE

CLIENT: MARLIM LESTE E SUL

JOB: BASIC DESIGN - REVIT I

AREA: MARLIM LESTE E SUL

TITLE: HULL 220V SYSTEMS ONE-LINE DIAGRAM

DESIGN	ESUP	EXEC.	U4QR	CHECK.	UR6X	APPROV.	UQBE
SCALE	NOT TO SCALE	DRAWING				SHEET	1 of 1
	INTERNAL						
DATE	Dec/28/23	No.	I-DE-3010.2Q-5140-946-P4X-004				

A1: 841mm X 594mm