INDEX OF REVISIONS

REV.	DESCRIPTION AND/OR REVISED SHEETS
0	ORIGINAL ISSUE
A	REVISED WHERE INDICATED
B	REVISED ITENS 4.3, 4.5.1, APPENDIX A AND APPENDIX L
C	REVISED ITEM L.3.3.
D	REVISED ITENS A.2 AND L.1
E	REVISED 4.5.1 AND 6.2
F	REVISED WHERE INDICATED
G	REVISED WHERE INDICATED
H	REVISED WHERE INDICATED

	REV. 0	REV. A	REV. B	REV. C	REV. D	REV. E	REV. F	REV. G	REV. H
DATE	JUN/11/19	JUL/2/20	SEP/29/20	OCT/02/20	OCT/14/20	OCT/23/20	MAR/31/21	SET/30/22	JUN/14/24
DESIGN	ESUP	ESUP	ESUP	ESUP	ESUP	ESUP	ESUP	ESUP	ESUP
EXECUTION	HUMBERTO	FRAGOMENI	FRAGOMENI	FRAGOMENI	FRAGOMENI	FRAGOMENI	FRAGOMENI	FRAGOMENI	CSM5
CHECK	WALBER	VILAIN	VILAIN	VILAIN	VILAIN	VILAIN	VILAIN	VILAIN	U4HT
APPROVAL	MEYRELLES	GILBERTO	GILBERTO	GILBERTO	GILBERTO	GILBERTO	GILBERTO	GILBERTO	BEX1

INFORMATION IN THIS DOCUMENT IS PROPERTY OF BUYER, BEING PROHIBITED OUTSIDE OF THEIR PURPOSE.

FORM OWNED TO BUYER N-0381 REV.L.

INTERNA

SUMMARY

1 GENERAL 4

2 NORMATIVE REFERENCES 4

3 DEFINITIONS AND ABBREVIATIONS 6

4 FABRICATION ROUTE AND APPLICABLE ACTIVITIES 8

5 GENERAL REQUIREMENTS 16

6 INCOMING MATERIALS INSPECTION 17

7 SPOOL FABRICATION 19

8 SPOOL CLEANING AND PRESERVATION 23

9 FIELD ASSEMBLY 25

10 PIPING CLEANING AND PRESERVATION 27

11 PRESSURE TESTING 28

12 FLUSHING 29

13 SHOCK BLOWING 29

14 ADDITIONAL CLEANING OPERATIONS 29

15 DRYING 30

16 PRESERVATION 30

17 LEAK TESTING 30

APPENDIX A – HYDROSTATIC TESTING OF PIPING SYSTEMS 31

APPENDIX B – PNEUMATIC TESTING OF PIPING SYSTEMS 38

INTERNA

APPENDIX C – WATER FLUSHING 41

APPENDIX D – AIR BLOWING 44

APPENDIX E – SHOCK BLOWING CLEANING 45

APPENDIX F – BORESCOPE/VIDEOSCOPE INSPECTION 47

APPENDIX G – DRYING 49

APPENDIX H – CHEMICAL CLEANING – CARBON STEEL 50

APPENDIX I – CHEMICAL CLEANING – CRA 52

APPENDIX J – OIL FLUSHING 54

APPENDIX K – PRESERVATION OF PIPING SYSTEMS 56

APPENDIX L – LEAK TESTING OF SYSTEMS 59

APPENDIX M – ALTERNATIVE TO CHEMICAL CLEANING – CARBON STEEL 66

APPENDIX N – COMMISSIONING ACTIVITIES PER FLUID 67

APPENDIX P – REQUIREMENTS FOR WELDING INSPECTION 68

APPENDIX Q – REQUIREMENTS FOR INSPECTION OF WELD OVERLAY AND CLAD RESTORATION 73

INTERNA

1 GENERAL

1.1 SCOPE

This specification in addition to other specifications and codes referred to in Section 2, defines the requirements for the welding, inspection, fabrication and installation of piping and components for all parts of offshore topside, marine, production and production support piping installations including prefabrication, module assembly, modules and hull integration, package, and skid mounted units.

This specification also sets forth rules for the commissioning activities that are applicable to the different systems, including flushing, pressure testing, cleaning, drying, leak testing and preservation.

This specification does not apply to the following:

- All instrument control piping downstream of first piping block valve (root valve).
- Subsea pipework and subsea risers.
- Flexible hoses.

1.2 DEVIATIONS

Deviations, modifications, and revisions to the requirements herein listed shall only be made after first gaining approval in writing from BUYER. A Technical Query Form (TQF) shall be used for this purpose. SELLER shall maintain a list of issued TQF's including date of issue, return and status.

Failure to observe this requirement may result in remedial work at SELLER expense.

2 NORMATIVE REFERENCES

The following standards and documents include provisions, which, though referenced in this text, constitute provisions of this technical specification. Latest issue of the references shall be used unless otherwise agreed. Other recognized standards may be used, provided it can be shown that they meet or exceed the requirements of the standards referenced below.

2.1 CLASSIFICATION RULES, CODES & STANDARDS

Refer to Project General Conditions and Data Specification for nominated Classification Society. Relevant Class rules shall apply.

2.2 CODES AND STANDARDS

- ASME B31.3 Process Piping
- ASME B31.8 Gas Transmission and Distribution Piping Systems
- ASME PCC-1 Guidelines for Pressure Boundary Bolted Flange Joint Assembly
- ASME PCC-2 Repair of Pressure Equipment and Piping

INTERNA

- ASTM A1038 Standard Test Method for Portable Hardness Testing by the Ultrasonic Contact Impedance Method
- ASTM A380 Standard Practice for Cleaning, Descaling, and Passivation of Stainless Steel Parts, Equipment, and Systems
- ASTM A967 Standard Specification for Chemical Passivation Treatments for Stainless Steel Parts
- API STD 520 Sizing, Selection, and Installation of Pressure-Relieving Devices
- AWS C5.5 Recommended Practices for Gas Tungsten Arc Welding
- AWS D10.10 Recommended Practices for Local Heating of Welds in Piping and Tubing
- IACS UR-P
- IOGP S-705 Supplementary Specification to API Recommended Practice 582 for Welding of Pressure Containing Equipment and Piping
- ISO 4406 Hydraulic Fluid Power – Fluids - Method for Coding the Level of Contamination by Solid Particles
- ISO 15156 Petroleum and Natural Gas Industries - Materials for Use in H2S-Containing Environments in Oil and Gas Production
- ISO 17781 Petroleum, Petrochemical and Natural Gas Industries - Test Methods for Quality Control of Microstructure of Ferritic/Austenitic (Duplex) Stainless Steels
- PFI ES-22 RECOMMENDED PRACTICE FOR COLOR CODING OF PIPING MATERIALS

2.3 SPECIFICATIONS

BUYER Engineering Technical Specifications (I-ET):

- I-ET-3010.00-1200-955-P4X-001 Welding
- I-ET-3010.00-1200-200-P4X-116 Bolted Joints Management
- I-ET-3010.00-1200-956-P4X-002 General Painting
- I-ET-3010.00-1200-431-P4X-001 Thermal Insulation for maritime installations
- I-ET-3010.00-1200-970-P4X-003 Requirements for Personnel Qualification and Certification
- I-ET-3010.00-1200-970-P4X-004 Requirements for Non-Destructive Testing
- I-ET-3010.00-1200-978-P4X-005 Requirements for Traceability of Materials

INTERNA

- I-ET-3010.00-1200-970-P4X-013 Compliance with NR-13 and SPIE Requirements
- I-ET-3010.00-1200-200-P4X-003 Materials, Design, Construction and Assembly of FRP Piping

3 DEFINITIONS AND ABBREVIATIONS

3.1 DEFINITIONS

- **SHALL:** verbal form used to indicate requirements strictly to be followed in order to conform to this technical specification and from which no deviation is permitted, unless accepted by all involved parties.
- **MAY:** verbal form used to indicate a course of action permissible within the limits of this technical specification.
- **QC INSPECTOR:** SELLERs qualified inspector that is responsible for executing technical inspections and/or supervising the Quality Control or Quality Assurance of its products and processes.
- **COMMISSIONING INSPECTOR:** SELLERs inspector that is responsible for supervising the commissioning activities.
- **COMMISSIONING ACTIVITIES:** all activities related to the piping preparation for operation that take place after the pressure test. It includes flushing, cleaning, drying, leak test and preservation activities.
- **CRA:** Indicates corrosion resistant alloys. This includes stainless steel (austenitic, duplex, superduplex, and so on), high nickel alloys, Cu-Ni alloys, Titanium, Inconel, Hastelloy, and any other non-ferrous alloys.
- **MODULE ASSEMBLY:** defined as an assembly of sequence related equipment and process piping functioning as, or within, an identifiable subsystem, which performs a specific function of a process. Modules are generally built offsite and installed on the vessel as a single unit limited by weight, size and lifting capabilities.
- **MODULES AND HULL INTEGRATION:** activity in which modules received onsite are connected within each other as well as connected to the hull.
- **ROOT VALVE:** valve used to separate (block) instrumentation from the piping/equipment to which they are connected.
- **EQUIPMENT:** is defined in the Equipment List and shall include, but is not limited to, such items as vessels, filters, heat exchangers, fired equipment, pumps, compressors, and so on, all which are connected to the piping being part of Pressure Test sub systems or Leak Test systems.

INTERNA

3.2 ABBREVIATIONS

CPVC	Chlorinated Poly Vinyl Chloride
CRA	Corrosion Resistant Alloys
GRP	Glass Reinforced Plastic
GTAW	Gas Tungsten Arc Welding
HAZ	Heat Affected Zone
NDT	Non-Destructive Testing
NPS	Nominal Pipe Size
P&ID	Piping and Instrument Diagram
PVC	Polyester Vinyl Chloride
PMI	Positive Materials Identification
PWHT	Post Weld Heat Treatment
VCI	Volatile Corrosion Inhibitor
WPS	Welding Procedure Specification

3.3 PROCEDURES TO BE ISSUED BY THE SELLER

The following procedures shall be issued by SELLER to BUYER approval as minimal, but not limited to:

(a) Income material inspection

(b) Material colour coding

(c) Spool fabrication, cleaning, and preservation

(d) Piping assembly

(e) Piping preservation

(f) Borescope inspection

(g) Piping cleaning (Air Blowing, water flushing, shock blowing, drying, pigging)

(h) Piping pressure test

(i) Piping leak test

(j) Nitrogen + Helium Leak Test

(k) Chemical cleaning – Carbon steel

(l) Cooling water system cleaning and preservation

(m) Chemical cleaning – CRA piping

(n) Oil Flushing

(o) Nitrogen gas preservation

INTERNA

(p) VCI preservation

(q) Piping welding inspection

4 FABRICATION ROUTE AND APPLICABLE ACTIVITIES

4.1 GENERAL FABRICATION ROUTE

All activities related to the piping fabrication and assembly shall be performed as stablished by the design requirements and supplemented by the requirements herein listed.

Figure 1 illustrates the activities that are generally applicable to all piping fabrication and assembly, including the commissioning activities. Details on the applicable requirements for each activity may be found on the following sections of this technical specification, as well as in the specific Appendices, as cited in Figure 1.

Some of the commissioning activities shown on Figure 1 may not be applicable to some of the UNIT piping/equipment systems, and this is properly addressed in the respective Appendix.

Alternatives for commissioning activities and preservation methods other than the ones herein detailed may be proposed by the SELLER. These alternatives shall be previously submitted for BUYER evaluation and approval.

INTERNA

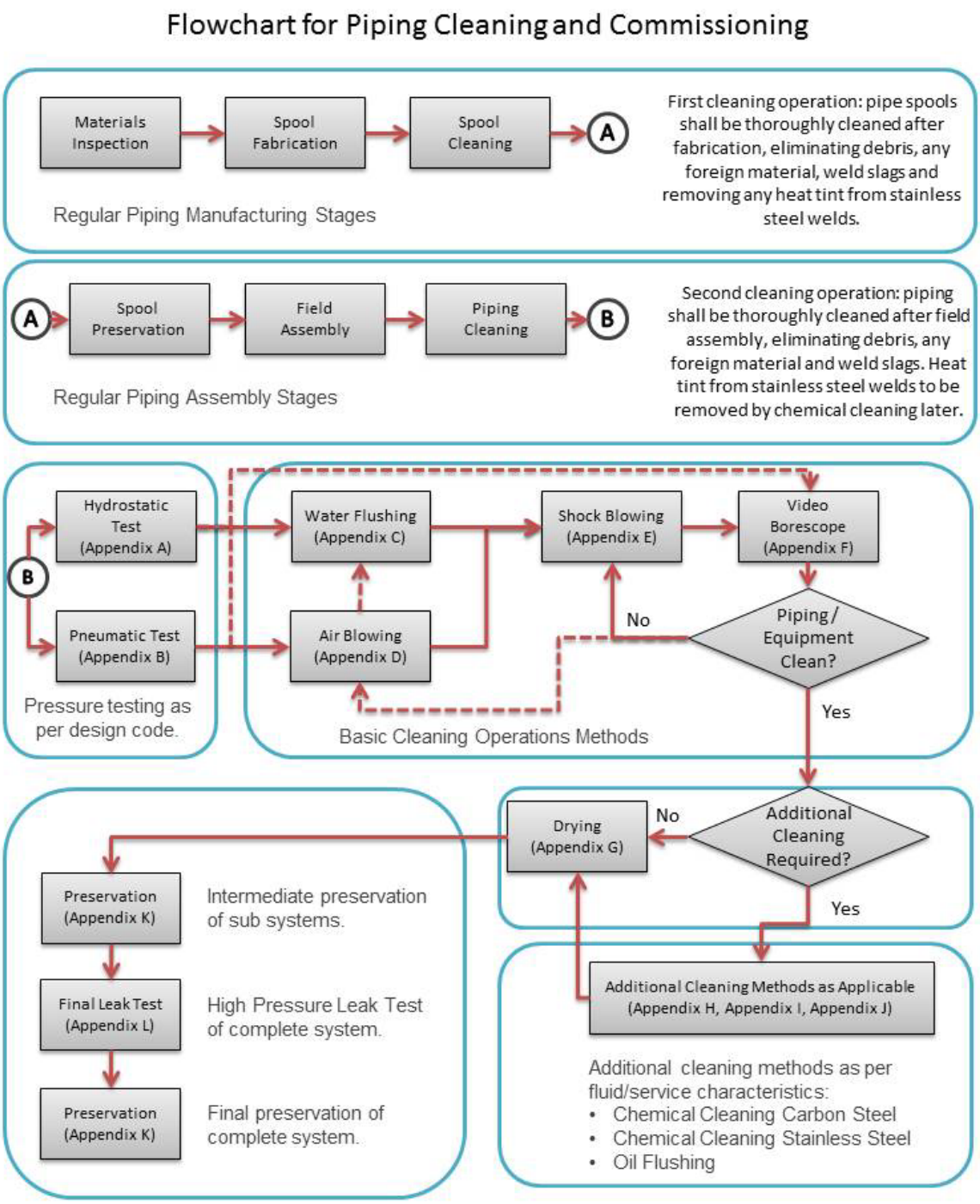

Figure 1 - Flowchart for the Fabrication, Assembly, Testing and Commissioning of Piping

INTERNA

4.2 DIRECT FIELD ASSEMBLY

Piping being fabricated and assembled directly to the unit (hull and marine systems, for example) shall be welded, inspected, pressure tested, flushed, and cleaned as the construction activities evolve.

Preservation measures shall always be applied to the sub systems as soon as they have been pressure tested and cleaned, and while waiting for the adjacent systems that will be part of the Final Leak Test system (High Pressure Leak Test, as per Appendix L).

Special attention shall be given to the maintenance of the preservation applied to such systems.

4.3 MODULE ASSEMBLY

All piping and equipment that are part of a module being constructed shall be finished before the module is transported for integration.

It means that all piping shall have been subject to the following:

- All welds have been completed, including the piping supports (except the weld joints that are part of hook up activities at integration phase, and the supports that are left unwelded in order to help the piping alignment during hook up).
- Dimensional control of the piping has been performed and approved (including the pipe spools that are meant to be connected during integration).
- All NDT and PWHT have been performed and approved.
- All piping/equipment have been painted, inspected, and approved.
- All pressure testing has been performed and approved.
- Flushing and cleaning activities have been performed, as applicable for each piping/equipment system.
- All piping/equipment have been dried.
- High Pressure Pre-Leak Testing have been performed and approved according to Appendix L.
- All piping/equipment have been properly preserved.

All activities listed above shall be performed as described in this technical specification.

Instruments shall not be removed after Leak Test, unless express recommendation from the supplier (removing instruments require the Leak Test to be repeated).

Piping and equipment that are part of systems that will be integrated on a later stage (they will be connected to other piping/equipment during integration) shall also be subject to all cited activities. The following shall be done by the Integrator:

(a) If the integration is made by a flanged joint (or any other connection that does not involve welding) all activities cited above shall be performed, including the High-Pressure Pre-Leak Test.

(b) If the integration is made by a welded joint all activities (including the High-Pressure Pre-Leak Test) shall be performed down to the last flanged joint.

INTERNA

For all flanges the seal surface shall be protected and sealed during the entire production period. Use steel plate, plywood, rubber plate or similar for mechanical protection (see Figure 2)

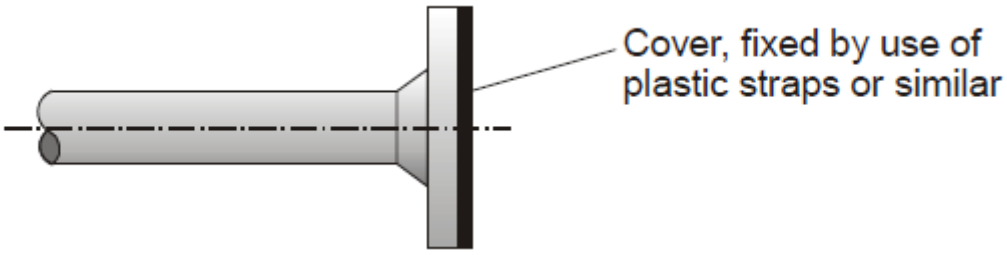

Figure 2 - Protection of flanges

All spools with weld ends shall be properly closed and sealed (metal caps, plastic caps) during the entire production period in order to protect the weld bevel as well as to enable proper preservation of the piping/equipment.

Preservation measures shall always be applied to module piping as soon as they have been pressure tested and cleaned.

4.4 INTEGRATION

Integration activities shall be performed with care not to interfere with the work and preservation already performed within the modules.

The following shall apply:

(a) If the integration is made by a flanged joint (or any other connection that does not involve welding) the blinds that have been previously installed shall only be removed in the eve of the new assembly. A visual inspection shall be performed on the piping (both sides) in order to make sure that they are clean and preserved as herein stablished. No debris, foreign material or trapped water shall be present in the piping/equipment. After integration (assembly of the joint) the system shall be leak tested and preserved as applicable.

(b) If the integration is made by a welded joint, the weld itself shall be performed as herein required (special attention to the fact that only GTAW is allowed for the root pass). After all NDT and PWHT have been approved, the integration spool shall be pressure tested, flushed, cleaned, dried and leak tested and preserved as applicable.

All welded joints made during integration shall be subject to the pressure testing and subsequent cleaning and testing activities.

All flanged/bolted joints (including module, integration, and hull piping) shall be subject to the High-Pressure Leak Test according to Appendix L at integration phase.

Before sailing away a sweep test shall be done in selected systems (See item L.10).

Preservation measures shall always be applied to integration piping as soon as they have been pressure tested and cleaned.

INTERNA

4.5 SELECTION OF COMMISSIONING ACTIVITIES PER PIPING SPEC/SERVICE

The selection of the commissioning activities to be performed depends on the several factors, such as the piping spec material, the pressure class, the conveyed fluid, the service, and even the location of the piping/system on the platform.

Appendix N – Commissioning Activities Per Fluid details typical acceptable activities for each fluid. Additional activities may be necessary due to lack of preservation and vendors requirements.

The following items act as a guide for selecting the applicable testing and commissioning activities, due to some of these factors.

4.5.1 PRESSURE TEST SELECTION

- Pressure tests may be performed with uncompressible fluids (hydrostatic test). The test pressure shall be in accordace with design requirements.
- As a general rule all piping shall be subject to a hydrostatic test prior mechanical completion, as stablished by the design code;
- Piping that will operate open to the atmosphere (no internal pressure during operation) may be subject to a flooding test instead of a pressure test to verify its mechanical completion. This flooding test depends solely on filling the piping system with water and checking for leaks on all connections;
- Piping system in Category D fluid service may be subjected to an initial service leak test in accordance with ASME B31.3 para. 345.7, in lieu of the hydrostatic leak test.
- Pneumatic test in lieu of the hydrostatic test is usually acceptable for the following fluids: Inert Gas (BG), Exhaust Gas (EG), Instrumentation Air (IA) including tubings, Instrumentation Nitrogen (IN), Service Compressed Air (SA), Start-up Air (SA), Start-up Nitrogen (SN);
- Pneumatic test for fluids other than the ones listed above is usually not permitted. Only where the hydrostatic test can not be applied (and this shall be based on technical reasons only) pneumatic test may be used;
- Pneumatic test is not acceptable for pipes made of non metallic materials, such as GRP, PVC, CPVC, or any other piping systems that contain materials and components that may present a brittle behaviour.
- Closure Welds: The final weld connecting piping systems or components that have been successfully tested in accordance with ASME B31.3 para. 345 may not be leak tested only under BUYER approval and provided the weld is examined in-process in accordance with ASME B31.3 para. 344.7 and passes with 100% radiographic examination in accordance with para. 344.5 or 100% ultrasonic examination in accordance with para. 344.6.
- Where both hydrostatic and pneumatic leak testing are impracticable, the alternative specified in ASME B31.3 para. 345.9 may be used only under the conditions stated in para. 345.1(c) and BUYER approval.
- Since the hydrostatic test is considered the standard test method, SELLER shall seek BUYER approval before the appplication of pneumatic tests, flooding test and initial service leak test.

INTERNA

4.5.2 BASIC CLEANING OPERATIONS SELECTION

- Although the piping shall have been cleaned prior to the pressure test, the cleaning operations are expected to be done after the pressure tests;
- In both cleaning operations cited above (prior to and after the pressure test) the basic cleaning operations methods for piping are water flushing, air blowing and shock air blowing;
- Mechanical cleaning of piping/systems is an acceptable alternative for the basic cleaning methods cited above. This can be performed, for example, with foam pigging or with ice pigging or high-pressure hydro jetting. High pressure hydro jetting at 7000 psi is necessary if the line is corroded internally and pigging shall be used to remove debris.
- There is no specific mandatory rule as to which one of the basic cleaning operation methods to choose for any given piping system, so that the flowchart in Figure 1 can be used as a suggestion only (water flushing for piping after hydrostatic test, air blowing for piping after pneumatic test, followed by shock blowing for both). More important than the method chosen is the result obtained.
- In any case the piping comissioning may only proceed for the next activities once the systems have been approved by the visual inspection. A report of a borescope internal inspection is mandatory for mechanichal completion of the system.

4.5.3 ADDITIONAL CLEANING OPERATION SELECTION

- Additional cleaning operations for piping are essentially chemical cleaning (for carbon steel and CRA materials) and oil flushing;
- Chemical cleaning are not applicable for organic coated lines, non-metalic and cooper nickel material;
- Internal chemical cleaning shall be applied to the following systems:
    - Chemical injecion lines (CN and CNI).
    - Diesel and jet fuel systems.
    - Closed drain systems (DF and DFC) in CRA material.
    - Piping systems which operation is directly related to operational availability and reliability, like piping systems for gas, diesel, fuel gas and any other which size and particulate content are required for reliable and safe operation.
    - Fire water system (Except lines in Cu-Ni material).
    - Closed water systems in carbon steel material (heating water, cooling water, chiled water systems).
    - Process and Produced water lines in CRA material.
    - Injection water lines (IW and IWC) in CRA material.
    - Process lines (P and PC) Upstream piping from compressors, filters, vessels with demisters or vanes, printed circuit heat exchangers and plate heat exchangers.
    - Compressor seal gas system;

INTERNA

- Acceptance criteria for the chemical cleaning of carbon steel materials shall be based on the requirements stablished by the supplier of the downstream equipment and/or accessory (compressor, filter, vessel, control valve, printed circuit heat exchangers or plate heat exchangers, as applicable).
- External chemical cleaning of all CRA materials shall always be applied, in order to restablish the materials to its full corrosion resistant properties. It shall remove all signs of contamination and oxidation (such as weld heat tint).
- Oil flushing shall be applied to specialized systems such as hydraulic systems, lubricating systems and sealing systems, as well as any other system to which the purity of the circulating fluid is essential to the correct and safe operation of the associated equipment.
- Acceptance criteria for the oil flushing shall be based on the requirements stablished by the supplier of the connecting equipment and or accessories, or as defined by internationally recognized standards applicable to these systems.
- SELLER shall submit a list of all systems to which these cleaning operations are expected to be applied, with the specific acceptance criteria as required by the equipments sub suppliers and/or applicable international standards.

4.5.4 DRYING AND PRESERVATION

- Drying is generally applicable to all piping/systems, and is considered an essential step for an effective preservation of the systems that shall follow.
- Basic preservation of the piping/systems that have been properly cleaned and dried consists basically in protecting its internal parts from any damage due to exposure to humidity, oxygen, dirt and ingress of any foreign material, as well as protecting its external surfaces from corrosion, contamination and mechanical damages due to work being done in its surroundings.
- Piping/systems that have been chemical cleaned shall be immediately preserved with nitrogen pressurization or VCI. Lack of preservation is not accepted at any time after chemical cleaning.
- All spools shall be sealed and preservad at all construction phases. Not coated carbon steel spools shall have VCI internally.
- Acceptable preservation methods for carbon steel not coated lines consists on the use of Nitrogen Gas or Volatile Corrosion Inhibitors for the internals. Other methods may be used, as long as they result in proper preservation of the internal surfaces and previosly approved by BUYER.
- Preservation means not only that the protective methods shall be applied, but also that they shall be frequently inspected, maintainned and reappllied as necessary.
- If at any time the applied preservation is considered to have failed (signs of degradation), remedial actions shall be promptly taken by the SELLER (at his expenses). The applicable cleaning methods (basic or additional as described in 4.5.2 and 4.5.3 above) shall be again performed, and drying and preservation redone.
- Nitrogen gas preservation shall be applicable for the following systems at the end of module construction and at the end of integration phase: Fuel Gas and Process (P and PC), Closed Water and Hidraulic oil systems maybe either nitrogen gas preservated or filled with operating fluid with VCI added and sealed.

INTERNA

- Nitrgen gas preservation consists of pressurize the system with 1 or 2 bar at the end module phase and operational pressure at the end of integration phase.See item K.3.1.

4.5.5 LEAK TEST

- As a general rule the Leak test shall be applied to all piping/systems in accordance with Appendix L.
- SELLER shall seek BUYER approval for exemptions of the mandatory Leak test.

4.6 FOLDER INSPECTIONS

- SELLER shall assembly folders and inspect the piping before scheduling the execution of each commissioning activity (pressure test, cleaning, high pressure leak test and preservation). After finishing this inspection and verify the conformity of the piping, SELLER shall issue a punch list and invite BUYER with at least 3 days in advance to check the inspection jointly with SELLER inspectors. The inspection will be reproved if any impeditive nonconformity is found, and a new date shall be scheduled. A certificate shall be issued and signed by BUYER for each inspection.
- No more than 5 days after the inspection is finished all nonconformities listed in punch lists shall be loaded in BUYER pendency system.
- After BUYER approval of the inspection mentioned above, SELLER shall invite BUYER to witness each commissioning activity (pressure test, cleaning, high pressure leak test and preservation) with at least 3 days in advance.
- After BUYER approval of commissioning activities listed above, SELLER shall prepare the respectively reports and certificates (pressure test, cleaning, high pressure leak test and preservation) and send to BUYER approval.
- Each commissioning activities will only be approved after the test is finished, all test equipment is disassembled from piping and all removed items are assembled again.
- Removed items from piping during commissioning activities shall be properly preserved.
- If BUYER decides to not attend any inspection or tests listed above, the certificates shall be delivered signed by SELLER inspectors. BUYER reserves the right to inspect the items in advance and to reject inspectors with frequent inaccuracies.
- Piping folders, punch lists and certificates covering all piping systems and commissioning activities shall be prepared, sent to BUYER approval, and loaded in BUYER documentation system at least 3 (three) months before any commissioning activity related to this folder starts.
- After the inspections and commissioning activities are finished, a scan version of signed certificates, punch lists and folders shall be loaded in BUYER documentation system by the SELLER not more than four weeks after the folder is finished.
- Quality and design documents shall be readily available to BUYER inspectors at any time during the inspections.

INTERNA

5 GENERAL REQUIREMENTS

5.1 QUALITY SYSTEM AND COMMISSIONING MANAGEMENT

The SELLER shall manage and control all the fabrication, manufacturing and commissioning activities through a system (software) capable of controlling the sequence and prerequisites for each step, as well as the responsible for performing and the applicable acceptance criteria.

The system shall also be capable of storing all reports with the due traceability with the applicable joints and systems.

5.2 CONNECTION TO EQUIPMENT

At the connection to equipment (vessels, compressor, pumps, turbines, and so on) that may be damaged due to dirt coming from the lines temporary strainers shall always be installed. They shall be kept during all commissioning stages until the start of the operation.

Connections to equipment shall always be planned so that they can be positively isolated from the lines to which they are connected (blanks, blades, spectacles).

5.3 BORESCOPE INSPECTION

Borescope inspection equipment and personnel shall be carried out according to Appendix F.

5.4 PERSONNEL QUALIFICATION

Personnel qualification shall be as stated in I-ET-3010.00-1200-970-P4X-003 Procedures for Personnel Qualification and Certification.

5.5 PAINTING

Painting of shall be performed as stablished I-ET-3010.00-1200-956-P4X-002 General Painting.

5.6 THERMAL INSULATION

Thermal insulation of shall be performed as stablished in I-ET-3010.00-1200-431-P4X-001 Thermal Insulation for maritime installations.

5.7 TRACEABILITY

Traceability of material shall be according to I-ET-3010.00-1200-978-P4X-005 Requirements for Materials Traceability.

INTERNA

6 INCOMING MATERIALS INSPECTION

6.1 RECEIVING INSPECTION

An appropriate incoming materials inspection is always necessary in order to avoid the use of materials, accessories and equipment that do not meet the necessary contractual standards and requirements.

The following competencies/personnel shall be involved in the materials receiving inspections:

(a) People responsible for receiving, checking, organizing, and storing all applicable documents that come along with the materials/accessories/equipment.

(b) People responsible for performing all technical activities herein listed (visual inspection, material identification, traceability check, dimensional check, colour code marking, preservation).

(c) People responsible for handling and releasing all received goods that were approved during the receiving inspection.

As a rule, all materials shall be stored indoors, in a covered warehouse, protected from the weather. Access to the materials already received shall be restricted to the people involved in the activities cited above, also including the QC and Commissioning Inspectors.

During these materials receiving inspection, the following activities shall be performed:

(a) Keep all goods in an appropriate segregated area while they are waiting for the applicable inspection activities and document check. They shall remain in this area until final approval has been given by the QC Inspector assigned to the activity.

(b) Check all documentation and manufacturing certificates against the purchase order and the applicable technical documents and standards.

(c) Check the packing and the preservation of the goods, and whether any damage due to handling and transportation has occurred.

(d) Check the mill markings and fabrication stamps of all goods as required by the applicable materials specifications and fabrication standards; Materials without identification shall be rejected and shall not be used.

(e) Perform Positive Material Identification (PMI) of all received materials, comparing all its components and parts to the expected materials specifications, according to APPENDIX P. This activity is not applicable to carbon steel materials.

(f) Perform ferrite check for all received materials made of duplex and superduplex stainless steel, including any welds therein contained, according to APPENDIX P.

(g) Check the integrity of all coatings applied to the goods (metallic and non-metallic coatings shall be inspected).

(h) Perform the dimensional check of all goods, checking its main characteristics (including the thickness check of all pressure retaining parts of the components).

(i) Transfer all applicable markings and traceability codes from the certificate to the pieces, as required by the SELLERS Quality System.

INTERNA

(j) Apply the colour coding as predicted in 6.2.

Note: All materials shall receive a colour code. Selecting one material to not receive a colour code is not an acceptable practice.

(k) Once the goods are approved by the QC Inspector, store them in a manner that its characteristics and its preservation are maintained, keeping them fit to be released for fabrication/assembly.

Only goods that were properly approved by the income materials inspection may be released for fabrication/assembly.

Materials that were rejected in the income materials inspection shall be moved to a completely segregated area and shall be removed from the yard as soon as possible in order to avoid its unintentional use.

A procedure shall be issued by the SELLER which shall detail all the activities applicable to the materials inspection step, including equipment, instruments, and methods, as well as all the main characteristics that shall be checked during inspection for each specific material/accessory/equipment.

6.2 COLOUR CODING OF MATERIALS

Materials shall be identified according to PFI ES-22. For materials not listed in the PFI standard the SELLER shall indicate the colour coding to be applied.

Additionally, a colour identification shall be painted in bolts and nuts. Bolts L7 and nuts 7L/4L shall receive a red identification colour in both faces while B7 bolts and 2H nuts shall receive blue.

Temporary equipment used during cleaning, pressure tests and leak tests shall be colour easily identifiable to facilitate the removal/reinstatement phase. This should include, but not be limited to, items such as blind flanges, spades, temporary test spools, caps, plugs, etc.

6.3 INSPECTION REPORT

A Materials Inspection Report shall be issued for all items received. This report shall be approved by the QC Inspector, and shall contain at least the following:

(a) Identify all components that were inspected.

(b) List all the applicable documents that were used to perform the inspection (Purchase Order, Technical Specifications, Materials Specifications, and so on).

(c) Identify the acceptance criteria for its main characteristics.

(d) Include all the results of the inspection performed.

(e) Include the traceability codes applied to the items, with a direct link with the applicable certificates and heat numbers, batch numbers or serial numbers, as applicable.

(f) Include pictures of the inspected items.

(g) Including tracking / identity code, accordingly to the Project's Material Management System.

INTERNA

6.4 GENERAL PRESERVATION

As a rule, the following shall always be applied to all materials/accessories/equipment:

(a) Protect all machined surfaces (including weld bevels and flange faces) from corrosion (by applying and appropriate varnish coat) and from mechanical damage (by applying and appropriate cover).

(b) Protect all threads (including bolts and nuts) from corrosion (by applying appropriate grease). Thread ends of pipes and accessories shall also be protected against mechanical damage with plastic caps.

(c) CRA materials shall be kept segregated from carbon and low alloy steel materials (ferritic materials), so that they are not contaminated. This segregation shall be maintained for all stages of fabrication that will follow.

(d) Stainless steel materials shall also be kept segregated from galvanized materials.

(e) All small materials/components shall be kept stored indoors, away from the floor.

(f) All valves, expansions joints, pipe hangers and other sensitive materials shall be kept stored indoors, away from the floor.

(g) Pipes and accessories (curves, tees) may be kept outdoors, but in this case, they shall be kept away from the floor and arranged in order to not accumulate any debris or water in its interior.

All the applied preservation measures shall be periodically reapplied as needed.

If at any time during the preservation any damage due to the lack of preservation of due to improper handling of the pieces is observed, the parts shall be segregated and once again inspected by the QC Inspector.

SELLER shall re-calibrate all Pressure Safety Valves (PSVs), after final alignment of piping in subsystems, independently of the calibration certificate supplied by valve manufacturer. This calibration shall be in accordance with API-STD 520 and Vendors standard procedures and witnessed by BUYER and Classification Society. SELLER shall provide a PSV calibration container on board for this activity.

A procedure shall be issued by the SELLER which shall detail the activities applicable to the preservation of all goods, including the preservation methods and products, as well as any specific requirements applicable to any group of material/accessory/equipment.

Preservation activities shall always be supervised by the Commissioning Inspectors.

7 SPOOL FABRICATION

7.1 GENERAL REQUIREMENTS

All CRA materials shall be segregated from the remaining materials to avoid contamination. This includes stainless steel (austenitic, duplex, superduplex, and so on), high nickel alloys, Cu-Ni alloys, Titanium, Hastelloy, and any other non-ferrous alloys.

Pipes and its components shall always be cleaned prior to using.

INTERNA

7.2 WELDING

Welding shall be performed as stablished in I-ET-3010.00-1200-955-P4X-001 Welding.

All pressure retaining butt joints shall be full penetration; including the welding of branch accessories such as reinforced outlets and bosses (the use of half coupling for branch connection is not allowed).

The root pass for all pressure retaining full penetration joints shall be made with GTAW process.

The welding of socket welds shall be done with GTAW process, with at least two layers (one pass on first layer, two passes on second layer as minimum) and a smooth convex profile.

Socket welding details shall be as shown on Figure 3.

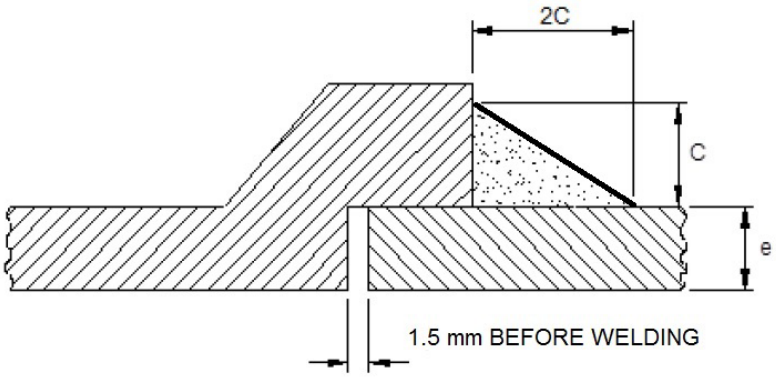

Figure 3 - Socket weld detail

Separation between any two pressure containing welds (Sp) and between an attachment weld and any other weld (Sa) shall be according to Figure 4.

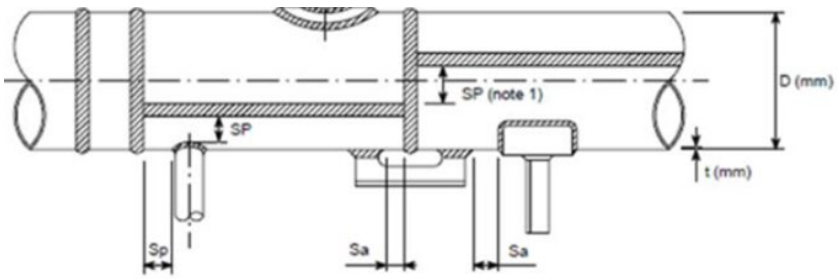

where:

Separations S = Sp or Sa as applicable

Sp = separation between any two pressure containing welds

$\sqrt{D \times t}$ (mm) minimum

Sa = separation between an attachment weld an any other weld

= the greater of 2t or 40 mm minimum

Figure 4 - Separation between any two pressure containing welds and between an attachment weld and any other weld

7.3 NDT

Welding inspection shall be performed as stablished in Appendix P - REQUIREMENTS FOR WELDING INSPECTION and Appendix Q - REQUIREMENTS FOR INSPECTION OF WELD OVERLAY AND CLAD RESTORATION.

The methods to perform all NDT shall be as stated in I-ET-3010.00-1200-970-P4X-004 Non-Destructive Testing Requirements for Metallic and Non-Metallic Materials.

7.4 PWHT

PWHT shall be performed as required by the design code. Where local heat treatment is to be performed (in lieu of heat treating in a furnace) the requirements of AWS D10.10 shall apply.

The PWHT log curves and reports for each welded joint shall be available for BUYER verification within 3 days from the execution date and have the traceability and quality records and report included at Quality and Commissioning Management System.

7.5 DIMENSIONAL CONTROL

Dimensional control of fabricated spools shall be as indicated in Figure 5.

INTERNA

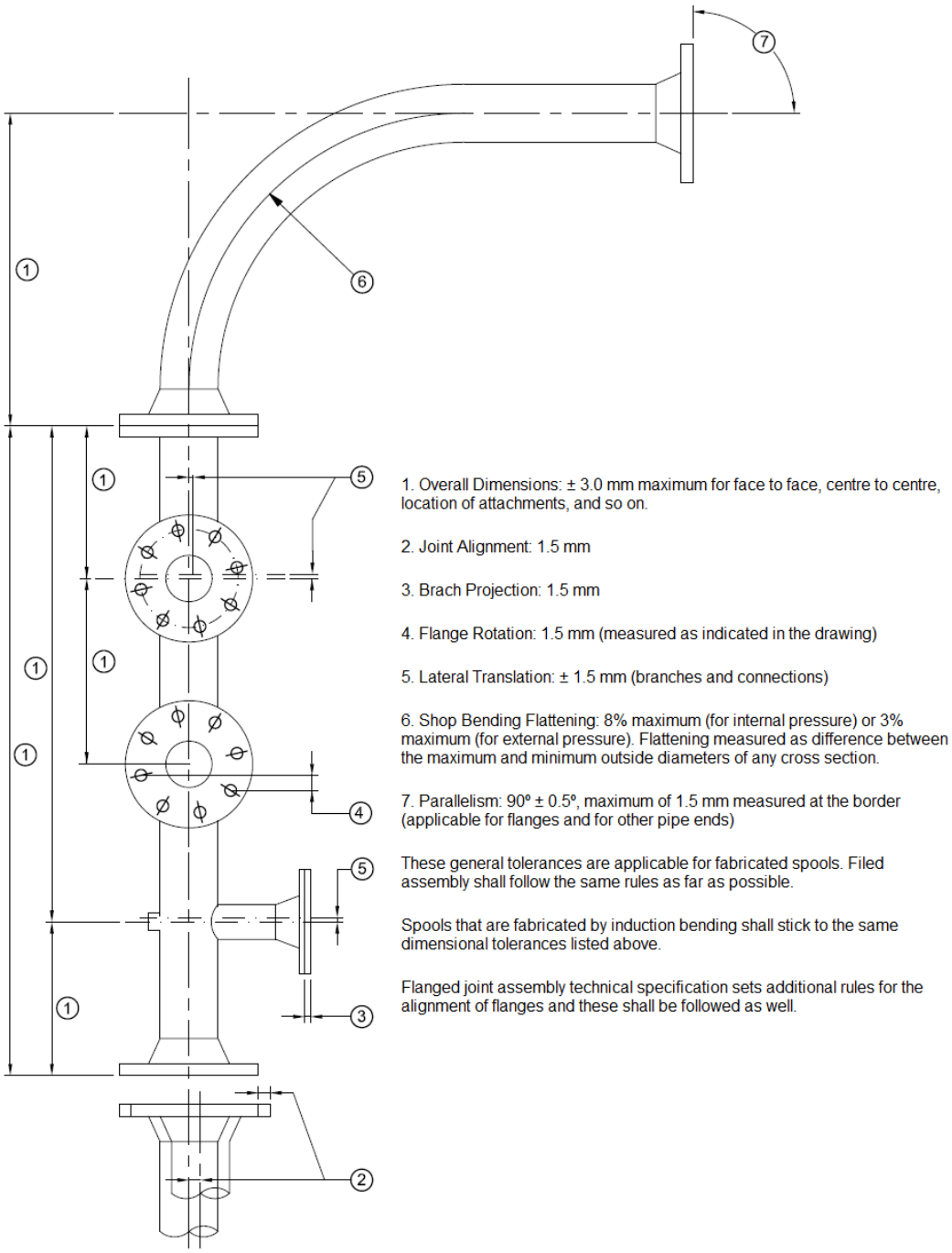

Figure 5 - Dimensional Requirements for Piping Spools

7.6 RELEASE FOR ASSEMBLY

All NDT, PWHT, PMI, hardness and ferrite testing, sand blasting, borescope inspection, dimension control, chemical cleaning and painting activities shall be completed and approved before the spool is released for field assembly. No carry over of activities is allowed, except for spools joints left unwelded (tacked only) for field adjustment.

8 SPOOL CLEANING AND PRESERVATION

8.1 CLEANING AND PAINTING

After fabrication and before being released for field assembly all piping spools shall be inspected, painted, identified, and cleaned.

All spools shall be checked to ensure they are clear of debris that may have accumulated during fabrication. The visual inspection of the spool interior shall reach its whole length. This inspection shall be performed with the aid of a borescope where needed, so that the whole internal surface is examined.

Where any debris or foreign material is found or even presence of excess loose corrosion in carbon steel piping, the spool shall be cleaned prior to being released to fabrication.

After cleaning and painting (when applicable) the spools shall be identified and stored in an appropriate segregated spool yard before being released to be field assembled. Spool yard shall have separated areas for each module.

CRA materials shall be kept in a separate spool yard from carbon and low alloy steel spools in order to avoid contamination.

If at any time the spool is found with water or any debris in it, it shall be thoroughly cleaned, and the preservation methods applied again (including the plastic covers).

8.2 SANDBLASTING, PRIMING, PAITING AND CLEANING OF CARBON STEEL SPOOLS

Before priming, carbon steel spools shall be sandblasted on the external surface. Finished surface shall be SA 2.5 or according to requirement in actual painting system. After priming all spools shall be mechanically cleaned inside, as follows.

INTERNA

Note! *Internal surface must not be sandblasted.*

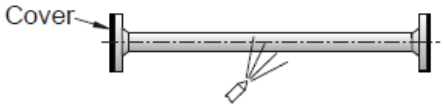

Sandblasting

1. Priming

External surface must be primed immediately after sandblasting. Use primer according to actual painting system.

2. Painting

Final painting of pipes must be done before installation onboard, to avoid corrosion in clamping zone.

Painting

3. Cleaning inside

After sandblasting and painting pipes must be cleaned inside. Remove all blank flanges before cleaning. If required, pipe to be mechanical cleaned inside by use of grinding stone.

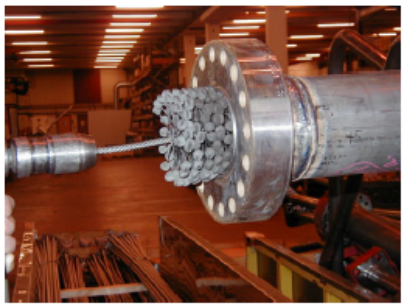

Mechanical cleaning of internal surface

8.3 CHEMICAL CLEANING OF CRA SPOOLS

When purging is not applied during weld or where it lacked efficiency in the protection of the joint, both internally and externally (oxidation level higher than permitted in welding specification as per AWS C5.5 detected by visual examination), CRA spools welds shall be pickled and passivated.

The pickling and passivation processes shall be according to ASTM A380.

Inconel coated spools and fittings shall be chemical cleaned after coating for obtaining a bright surface. Production welds shall be chemical cleaned if oxide, scale, tarnish, or discoloration are present.

Pickling of Inconel shall be according to ASM Handbook.

8.4 PRESERVATION

At the spool storage yards the spools shall always be kept away from the floor and protected from the rain so that water and debris will not accumulate.

Preservation of spools and components shall follow the same rules as indicates in item 6.4, especially the following:

- Spool ends shall always be kept closed and sealed with an appropriate cap.
- No water shall be allowed to accumulate inside the spools.
- Flange faces and all other machined surfaces shall be preserved against corrosion (varnish coat).
- Flange faces shall be protected against mechanical damage with the aid of plastic caps.
- Bolts, nuts and all threaded connections shall be protected with grease.

INTERNA

If at any time the spool is found with water or any debris, it shall be thoroughly cleaned, and the preservation methods again applied (including the plastic caps).

CRA surfaces with any signs of contamination or oxides from any source shall be chemically cleaned again and so restored to its full corrosion resistance properties.

Only clean and well-preserved spools may be released for field assembly.

Release for field assembly shall be approved by the QC Inspector based on the cleaning and preservation requirements herein listed.

9 FIELD ASSEMBLY

9.1 GENERAL REQUIREMENTS

The general requirements are the same applied to spool fabrication, with the additional care that spool ends shall be kept with their plastic covers until the moment comes to weld or assembly them. All piping open ends shall always be kept properly closed so that water and debris will not accumulate.

9.2 WELDING / NDT / PWHT / DIMENSIONAL CONTROL

Same requirements as applied to spool fabrication.

9.3 PIPE SUPPORTS

All pipe supports shall be installed and active before proceeding to the system pressure test.

Piping supports, guides, sliding pads, cells and all non-accessible surfaces shall be painted accordingly to painting specification prior to piping assembly.

9.4 FLANGED JOINTS / BOLTED CONNECTIONS

All flange joints and bolted connections shall be assembled as per the requirements of I-ET-3010.00-1200-200-P4X-116 – Bolted Joints Management.

Bolts, gaskets, and lubricants to be used shall always be in conformance with the approved design and assembly procedure.

Studs and bolts shall extend through their nuts such that there is complete thread engagement for the full depth of the nut.

Gaskets shall be correctly identified by the vendor according to its design standard. Gaskets identified in field or with no identification are not allowed.

9.5 VALVES

Valves shall be assembled in the correct position and orientation, based on the specific drawings and flow indication.

INTERNA

Concentric butterfly valves shall be installed with no gaskets between valve and flanges when recommend by the vendor.

Excentric butterfly valves shall be installed according to preferred sealing direction.

Valves shall be kept clean and lubricated to avoid locking and maintain the tightness, according to the minimum recommended by Vendor.

9.6 SPRING SUPPORTS AND EXPANSION JOINTS

Spring supports shall be kept locked until the end of the pressure tests and flushing operations.

Locking of spring supports and expansion joints of piping connect to dynamic equipment shall be kept locked until final piping alignment (parallelism, concentricity and gap adjustments) accordingly to Vendors' procedures and approval have been executed.

Bellows from expansion joints shall be protected against mechanical damage.

The expansion joints installation shall be as stablished in the manufacturer's manual.

The following shall always be observed when installing "Dresser Type" expansion joints (or "Dresser Type" coupling):

- The pipe gap and the pipe alignment shall be measured prior to installing the joint and shall be as defined in the equipment manual; Maximum shall be according to manufacturer specification.
- The piping supports shall be as stablished in the manufacturer's installation manual (fixed supports, guides and their relative distance to the coupling).
- The coupling shall be installed centralized to the pipe gap. In order to check whether the joint location relative to the gap hasn't shifted during operation the adjoining pipes shall have a stripe painted on both sides, on equal distances to the gap and outside the expansion joint area (recommended 100 mm outside the coupling area). Relative position of the coupling to the pipe gap may then be inferred by checking the distance of to the coupling to both painted stripes (Figure 6).
- The pipe area over which the gasket will be installed shall be thoroughly cleaned prior to installation.
- An appropriate lubricant (i.e., Vaseline) shall be used on the pipe and gasket sliding surfaces. Gasket manufacturer installation manual shall be checked for compatibility of the gasket material to the lubricant.
- Torque for the assembly rods shall be as stablished in the manufacturer's installation manual. Lubrication and torque control shall be strictly followed.
- A dimensional report shall be issued for each installed coupling. The dimensional report shall include the piping alignment and gap measurement prior to the coupling installation, as well as the final piping dimensional inspection of the installed joint.

INTERNA

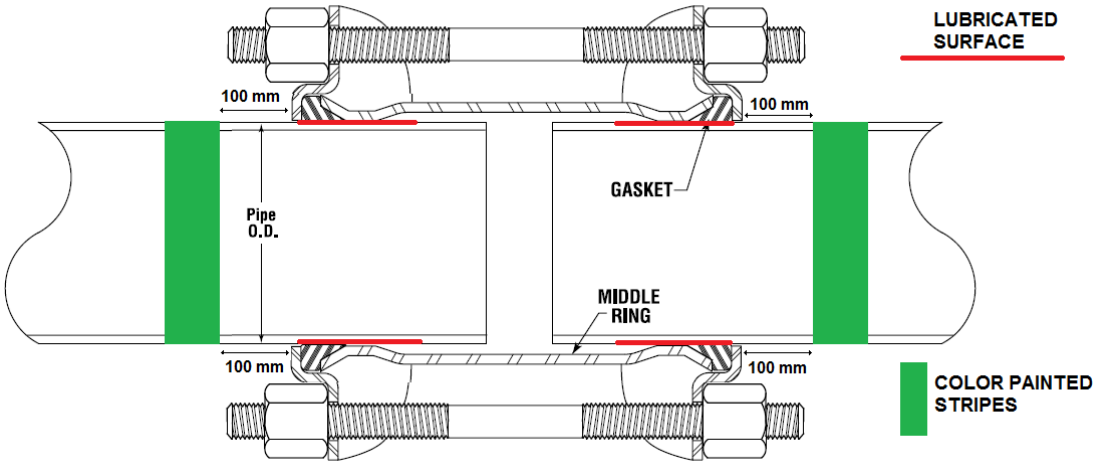

Figure 6 - Dresser Type Coupling

10 PIPING CLEANING AND PRESERVATION

10.1 CLEANING

Before pressure testing and after field assembly, piping shall be cleaned to eliminate debris, any foreign material and weld slags. Heat tint from stainless steel welds to be removed by chemical cleaning later.

All items that could be damaged resulting from the cleaning operations shall be blanked off or removed from the system. These items may include the following:

- Control Valves and any actuated valves.
- Safety Related Valves (SDV, BDV, XV).
- Valves with resilient seats (soft seated).
- Pressure Relief/Safety Valves, Rupture Disks.
- Thermal Relief Valves.
- Instruments.
- Expansion Joints.
- Strainers Baskets.
- Orifice Plates and Dummy Plates.
- Steam/Condensate Traps.

All necessary precautions shall be taken to ensure debris is not flushed into associated equipment or piping "dead ends".

Mechanical cleaning techniques are acceptable, like foam pigging or ice pigging or Hydro Jetting. A written procedure shall be issued with the details of the technique and submitted for BUYER approval.

INTERNA

After the cleaning, the visual inspection of the piping interior shall reach the whole length of the pipe system, as well as all and every equipment that will be part of the pressure test system later. This inspection shall be performed with a borescope, so that the whole internal surface is examined.

10.2 PRESERVATION

Preservation of pipework and components shall follow the same rules as indicated in item 6.4, especially the following:

- Pipe ends shall always be kept closed with an appropriate cap.
- No water shall be allowed to accumulate inside the piping.
- Flange faces and all other machined surfaces shall be preserved against corrosion (varnish coat).
- Flange faces shall be protected against mechanical damage with the aid of plastic caps.
- Bolts, nuts and all threaded connections shall be protected with grease.
- CRA materials shall be protected from cross contamination from carbon steel work on the same area.
- Paddle blanks, spades and spacers shall be properly preserved and fixed in nearby structures.

If at any time the piping is found with water or any debris, it shall be thoroughly cleaned, and the preservation methods again applied (including the plastic caps).

CRA surfaces with any signs of contamination or oxides from any source shall be chemically cleaned and so restored to its full corrosion resistance properties.

10.3 CLEANING AND PRESERVATION REPORT

Inspection Report shall be issued with the results of the visual inspection performed on the piping after cleaning. This report shall include still images of the piping (internal and external) showing that it has been properly cleaned and preserved.

The inspection report shall be approved by the SELLER, and then submitted for BUYER approval.

Borescope inspection videos shall be submitted for BUYER approval along with the respective reports.

11 PRESSURE TESTING

Once all manufacturing related activities have been completed (welding, NDT, PWHT, and so on) the piping shall be pressure tested as per the requirements of the design code.

The most usual test is the hydrostatic test, made with uncompressible fluid (usually fresh water). This is the preferred test for all systems.

Pneumatic test in lieu of the hydrostatic test is usually acceptable as per the design code, but it shall be restricted to the cases where the hydrostatic test cannot be performed.

Hydrostatic testing shall be performed as detailed in Appendix A.

Pneumatic testing shall be performed as detailed in Appendix B.

Rupture disks shall only be installed after the pressure tests.

INTERNA

12 FLUSHING

Flushing operations shall follow the pressure test. The main objective is to help remove any debris or dirt that remains in the piping/equipment.

Usually, water flushing follows the hydrostatic test, as air blowing follows the pneumatic test. The flushing operations may be waived if the visual inspection of the piping indicates that the system is free from dirt, debris, or foreign materials.

The duration of the flushing shall be based on the cleaning requirements for the piping system. The acceptance criteria shall be proposed by the SELLER and approved by BUYER.

Flushing operations shall be performed as detailed in Appendices C and D (water flushing and air blowing respectively).

13 SHOCK BLOWING

Shock blowing usually follows the flushing operations. It helps to remove more persistent dirt that is adhered to the piping/equipment walls.

It is usually applied to all piping.

The number of shock blowing operations shall be based on the cleaning requirements for the piping system. The acceptance criteria shall be proposed by the SELLER and approved by BUYER.

Shock blowing shall be performed as detailed in Appendix E.

14 ADDITIONAL CLEANING OPERATIONS

Additional cleaning operations are applied to specific piping systems. The piping systems and the cleaning requirements are usually determined by BUYER, by the DESIGNER of the unit or by the SUPPLIER of some equipment or specialized systems.

Stainless steel piping operating with corrosive fluids will always require chemical cleaning in order to remove contamination and heat tint from welding operation. Chemical cleaning shall be made externally and internally and is considered an essential procedure in order to recover its corrosion resistance properties.

SELLER shall follow all applicable recommendations and cleaning requirements for the systems in order to guarantee an appropriate commissioning for the UNIT.

The cleaning operations applicable to each line shall be as determined in item 4.5.

Internal cleaning operations shall be performed as detailed in Appendices H, I and J (chemical cleaning of carbon steel, chemical cleaning of stainless steel and oil flushing, respectively).

Cleaning operations other than the ones listed in the cited Appendices shall be based on a written procedure that shall be submitted to BUYER for approval.

Under BUYER approval, alternatively to the chemical cleaning of carbon steel piping systems presented in Appendix H, a cleaning method based on rust removers applied along with the hydrostatic test may be used, see Appendix M.

INTERNA

15 DRYING

Following the flushing, shock blowing, or the additional cleaning operations (as applicable) piping shall usually be dried in order to prepare for the subsequent preservation activities.

Drying shall be performed as detailed in Appendix G.

Some systems need not be dried after cleaning, such as the Cu-Ni and GRP pipes that operate with sea water. SELLER shall obtain approval from BUYER for systems to which he intends not to perform any drying with due justification for each case.

16 PRESERVATION

Preservation shall be applied in two different moments to the piping/equipment system.

Since the final High Pressure Leak Test (Appendix L) demands a high connectivity of the piping/equipment systems (in order to reduce the number of tests and reduce the number of untested joints) the final test system is usually composed of many sub systems, initially divided in order to perform the pressure tests and the cleaning operations.

Soon after the pressure test and the cleaning operations have been completed the sub systems shall be preserved in order to wait for the adjacent systems that will integrate the final Leak Test system.

Preservation of these sub systems shall then be performed as detailed in Appendix K.

After final integration and full reinstatement of the piping/equipment systems and after the final Leak Test has been applied and approved, the systems shall again be subject to preservation in order to wait for the initial operation of the unit.

Again, the preservation of these systems shall be performed as detailed in Appendix K.

17 LEAK TESTING

The final Leak Test (or High-Pressure Leak Test) shall be applied to systems which are mechanically completed, with all applicable accessories, equipment and instrumentation already connected.

This final Leak Test shall be performed as detailed in Appendix L.

INTERNA

APPENDIX A – HYDROSTATIC TESTING OF PIPING SYSTEMS

A.1 SCOPE

This Appendix stablishes requirements for the pressure testing of the piping work with incompressible fluids (hydrotest or hydrostatic test).

Basic requirements for this test shall be as stablished in the design code (most likely ASME B31.3), and these shall be complemented with the additional requirements herein listed.

This test is applicable to all piping systems. Exceptions to the hydrostatic test shall be justified and BUYER approval is necessary.

A.2 REQUIREMENTS

Prior the Hydrostatic test, all welds, NDT and PWHT shall be completed and approved. All piping support shall be finished and properly installed. Hydrostatic test of piping over temporary support or scaffolding is not acceptable (except for gas piping where additional support is deemed necessary due to the water weight).

Prior to performing the test, the piping shall be thoroughly cleaned.

A written procedure shall be issued with all the applicable details for performing this test. The procedure shall be approved by BUYER.

For GRP piping hydrostatic tests, special requirements listed in I-ET-3010.00-1200-200-P4X-003, such as longer test periods, are mandatory when not in accordance with this specification.

A.3 PREPARATION FOR PRESSURE TESTING

A.3.1 Piping System Test Folder

A piping system test folder shall be prepared prior to the testing. As a minimum the following shall be a part of the folder:

- Front page (with test package number).
- Marked P&ID identifying limits of the hydrotest system.
- As-Built isometric drawings.
- Weld maps and summary list.
- NDT completion certificates.
- Heat treatment clearance.
- Visual Inspection Report.
- Mechanical Completion Certificate.
- Cleaning Certificates.
- Flushing report (as applicable).
- Hydrostatic test report including recorder charts.
- Calibration Certificate of test instruments.

INTERNA

- Reinstatement check list.
- Graphic pressure x time
- Schematic drawing containing all connections, vents, drains, manifolds, and accessories for the test, including material list. (ISOTEST).

A.3.2 Visual Inspection Prior to Testing

A visual inspection of the piping system to be tested shall be performed before starting the setup of the test. The main goal of this inspection is to make sure that the system is ready to be tested, and that all previous steps/activities have been performed and approved.

This visual inspection shall be performed by a QC Inspector along with a Commissioning Inspector, and together they shall approve the piping system for the commencing of the test.

In this inspection they shall evaluate the following, as a minimum:

- Material traceability is satisfied.
- All welds have been completed, the applicable NDT and PWHT performed, and all results are approved.
- PMI has been performed on all materials and welds (as applicable).
- All other connections (flanged, threaded or any other bolted connection) have been performed, inspected and approved.
- All piping supports (as per applicable drawings) are installed and are functional.
- All temporary supports and assembly aids have been removed.
- Additional supports for pressure testing, as deemed necessary in the design, have been installed (these cannot be welded to the piping or any other accessory).
- All sensitive components have been removed (see item A.3.3 below).

All piping shall be adequately supported. Spring supports shall have the pin inserted/blocked to prevent movement.

An Inspection Report shall be issued with all relevant information and shall be signed by the QC Inspector and by the Commissioning Inspector. The Inspection Report shall also include the list of removed items (item A.3.3), as well as the applicable test requirements as detailed in the Test Procedure.

Preferably testing should not take place through or into vessels or tanks. If the test limit of a line/system is at a welded connection to a vessel/tank, the line/system should be isolated at the first available flange or other means of isolation and the untested welded connections be subject to 100% NDT.

If the SELLER deems it necessary to include pressure vessels/equipment in the system test, SUPPLIER approval shall be obtained prior to testing. Care shall be taken to ensure that pressure applied takes due account of the hydrostatic head within the vessel.

The SELLER shall ensure that the vessel test pressures are equal to or higher than the combined piping test pressure and hydrostatic head.

INTERNA

A.3.3 Items to Be Removed Prior to the Hydrostatic Test

All items that could be damaged resulting from the test shall be blanked off or removed from the system. Some of these items might have already been removed for the cleaning operations prior to the test (especially when the cleaning operations involve water flushing or air blowing).

These items may include the following:

- Pressure Relief/Safety Valves, Rupture Disks.
- Thermal Relief Valves.
- Instruments.
- Expansion Joints.
- Steam/Condensate Traps.
- Control Valves and any actuated valves.
- Strainers Baskets.
- Orifice Plates and Dummy Plates.

Suitable spool pieces (hydrotest spools) or blinds shall be installed in place of the removed items.

Critical items such as choke valves, insulation joints, turbine and positive displacement meters, etc. shall not be installed until flushing and hydrostatic testing is complete. These items shall be installed prior to Leak Test (as per Appendix L).

Instrument components such as orifice plates, rupture discs, pressure gauges, probes, transmitters, etc. shall not be installed until flushing and hydrostatic testing is complete, unless otherwise approved by BUYER.

Piping system containing unrestrained expansion joints shall be tested in accordance with item 345.3.3 of ASME B31.3.

When expansion joints are included in the test, check whether the piping support is compatible with the pressure thrust resulting from the test.

In-line equipment shall preferably be hydrostatic tested. Unless not recommended by the Vendor. The following points shall be satisfied:

- The equipment test pressure is equal to or greater than that of the piping system.
- The supporting steelwork would not be over stressed if the pipework and equipment were tested together due to combined weights.
- Equipment shall not suffer damage due to testing medium.

The visual inspection report (as per item A.3.2) shall contain a list of all items removed prior to flushing and pressure testing, indicating the location of all temporary spool pieces, blanks and temporary joints.

INTERNA

A.3.4 Hydrostatic Test Equipment and Accessories

SELLER shall ensure that all ancillary fittings used are rated for the correct pressure involved (e.g., temporary piping, spades, blanks, caps, etc. shall withstand the test pressure). Hoses shall only be used on pressure tests if they have an approved certificate for at least 150% of the pressures involved. Upon completion of the test, all ancillary fittings are to be removed and the system returned to a state of compliance with the P&ID.

The thickness of blinds used for pressure testing shall be in accordance with ANSI B16.5.

Blinds cut from plate shall have the thickness calculated in accordance with ASME B31.3.

Pressure gauges used to indicate and record test pressures shall be calibrated.

Pressure and temperature time recorders shall be used for all hydrostatic tests.

Test manifold shall be designed to withstand a pressure of at least 110% of the maximum test pressure. The manifold shall be subject to Certifying Authority inspection and 100% volumetric and surface NDT. The test manifolds should be assembled to contain a pressure gauge and a calibrated pressure relief valve.

Flexible hoses shall be equipped with safety devices to prevent hose whip events in case they accidentally disconnect.

A.3.5 Test Fluid

Hydrotest medium shall be fresh clean water, with chloride content not exceeding 50 ppm and with a corrosion inhibitor added. For CRA, internally coated and non-metallic lines, the use of corrosion inhibitor is under discretion of SELLER.

The re-use of water is not allowed between lines of different materials.

Lines in GRP or Cu-Ni Material that operate with sea water may use it as a test fluid.

Alternative test fluids shall be previously approved by BUYER.

A.3.6 Test Pressure

The test pressure shall be according to design requirements.

Any component that would limit the hydrotest pressure shall be removed prior to testing.

A.3.7 Test Temperature

The minimum test temperature shall be 10ºC or the minimum design temperature (as per piping spec), whichever is higher.

If the test temperature is below 10ºC the SELLER shall demonstrate that all components that are included in the test system have enough toughness for the intended test temperature.

INTERNA

A.4 TEST PROCEDURE

A.4.1 Vents and Drains

Process start-up and maintenance vents and drains shall be used whenever possible for hydrotest. These vents and drains are indicated on the isometrics.

When start-up and maintenance vents and drains are not available, hydrotest vents and drains shall be installed prior to flushing and testing in all high and low points in the piping system to expel the air and drain the line respectively. The SELLER shall locate and install hydrotest vents and drains.

Hydrotest vents and drains shall be in accordance with typical details for process vents and drains, with the exception that for lines up to and including NPS 12 the diameter of the branch shall be NPS ½, and for lines NPS 14 and above the diameter of the branch shall be NPS ¾ (bigger diameters for the branch are allowed if deemed necessary).

A.4.2 Exclusion Zones

Prior to the commencement of any test, safety barriers should be added, and sufficient notices should be given to all affected parties on the grounds of safety. Notices clearly marked “TEST IN PROGRESS” shall be displayed around the perimeter of the safe working area or on the system being tested. The notices may be removed at the earliest opportunity after successful completion of the test. All non-essential personnel not involved in the testing shall be warned to keep clear of the area. Pipework being subject to test should not normally be approached for examination until a reasonable time has elapsed.

A.4.3 Filling and Emptying

System to be hydrostatically tested shall be filled from the lowest or most advantageous point in the system. All vent valves shall be open prior to filling to eliminate air entrainment. This does not necessarily apply to large diameter piping which may be filled from the top.

All vents shall be opened before the system is drained and shall remain open during draining to prevent pulling a vacuum on the system. Drainage of test (and flushing) medium shall be to an agreed predetermined location.

A.4.4 Gauges and Measures

The pressure gauge shall have a range in the order of 1.5 to 2 times the intended maximum test pressure.

Pressure gauges used to indicate and record test pressures shall be dead weight tested for accuracy. A minimum of two gauges shall be used and positioned at the highest and lowest point in the system. The gauge located at the highest point shall indicate the required test pressure.

Test pressures shall be checked by means of certified test gauge and pressure recorder, which shall be calibrated. Gauges subject to a shock shall always be re-calibrated.

The test pressure and the ambient temperature shall be recorded during the entire test by means of calibrated recorders. Calibration reports shall be provided.

The ambient temperatures of the pipework subject to the hydrotest being recorded shall be included with the test certification (pressure variations that may occur during the test can sometimes be related to a temperature variation).

INTERNA

Additional pressure gauges shall be located on each main header and any sub-headers to ensure the whole of the system is being tested. These pressure gauges need not be certified test pressure gauges.

A calibration register of gauges and recorders should be kept and maintained.

A.4.5 Preparation for Testing

Gaskets used during hydrostatic testing shall be the same type and quality as the gaskets installed during normal service. When opening bolt connections after the test all gaskets shall be replaced with new gaskets after hydrostatic testing, except metallic ring joints that could be re-used if found in good condition after careful inspection.

Normally no testing shall take place under rain, fog or when the ambient temperature falls below +5°C.

All valves shall be open prior to fill commencing except ball valves that shall be half open. For pressure testing of systems provided with check valves the pressure shall be furnished from the upstream side of the check valve. Pressure shall be released from the downstream side of the check valve. This eliminates the requirement for removal of check valves or check valve internals prior to hydrostatic testing.

Testing against a closed valve will only be permitted with prior approval from BUYER.

A.4.6 Applying Pressure

Test pressure shall be applied by means of a suitable test pump or other pressure source.

The pump or source of pressure shall require an independent pressure gauge, if not already integral with the pump.

The hydraulic pressure shall be applied gradually and increased progressively, until test pressure is achieved. After the test pressure has reached the specified level and is stable, test pressure shall be maintained for reasonable time before system is put on official test and shall be checked for pressure abnormalities and leaks during this period.

The pump shall be isolated from the system whenever the pump is left unattended or when the test pressure has been attained.

The pump and recorders shall be attended constantly during the test by an authorized person.

No work can be done on the system under pressure, including hot work, hammering, or even applying torque to bolts.

A.5 END OF TEST

After the hydrostatic test has been completed, the pressure shall be released gradually in steps so as not to endanger personnel or damage equipment.

Any leaks discovered during testing, as a consequence of faulty fabrication, workmanship or due to inferior materials delivered by the SELLER, shall be repaired at the expense of the SELLER.

Should any repair work be necessary as a result of the pressure test, the piping affected by such work shall be subject to additional testing. After completion of pressure testing, no welding or hot works shall be performed on the pipes and fittings.

INTERNA

All joints failing to pass the pressure test shall be repaired and examined in accordance with the applicable technical specifications and retested.

All tests shall be signed at the start and completion by an authorized SELLER inspector, an authorized BUYER representative and a third-party inspection representative or a Classification Society Surveyor. Should a test fail to be completed or if it does not meet BUYER specification, all records shall be kept and submitted with final test certificates.

Piping that has been approved in the hydrotest shall be marked accordingly in order to avoid any hot work being done on it or even any unnecessary disassembly of flanged joints.

A.6 REINSTATING

Components that were removed/isolated from the piping for the hydrotest shall not be put back in place until the piping have been properly visually inspected and cleaned. Valves shall be completely drained, and no water is acceptable inside valve cavity. Cleaning methods may be water flushing (as per Appendix C), air blowing (as per Appendix D) or shock air blowing (as per Appendix E).

Additional cleaning operations may be applied depending on the piping system being commissioned (Appendices H, I or J), and afterwards the piping shall be dried (as per Appendix G).

After successfully cleaning the pipe, all removed and/or isolated components may be connected. The system shall be fully reinstated and assembled before the Final High Pressure Leak Test (as per Appendix L).

INTERNA

APPENDIX B – PNEUMATIC TESTING OF PIPING SYSTEMS

B.1 SCOPE

This Appendix stablishes requirements for the pressure testing of the piping work with compressible fluids (pneumatic test).

Basic requirements for this test shall be as stablished in the design code (most likely ASME B31.3), and by Appendix A – Hydrostatic Test. These requirements shall be complemented with the additional requirements herein listed.

Pneumatic tests as herein described shall only be applied where the hydrostatic test is considered impracticable.

B.2 REQUIREMENTS

Same as required for the pneumatic text (Appendix A).

A written procedure shall be issued with all the applicable details for performing this test. The procedure shall be approved by BUYER.

This test cannot be applied to GRP piping.

B.3 PREPARATION FOR PRESSURE TESTING

B.3.1 Piping System Test Folder

Same as required for the hydrostatic test (Appendix A).

B.3.2 Visual Inspection Prior to Testing

Same as required for the hydrostatic test (Appendix A).

Since the accumulated energy is proportional to the volume, testing system shall not include any vessels or tanks. If the test limit of a line/system is at a welded connection to a vessel/tank, the line/system should be isolated at the first available flange or other means of isolation and the untested welded connections shall be subject to 100% NDT.

B.3.3 Items to Be Removed Prior to Cleaning or Testing

Same as required for the hydrostatic test (Appendix A).

B.3.4 Pneumatic Test Equipment and Accessories

Same as required for the hydrostatic test equipment and accessories (Appendix A).

B.3.5 Test Fluid

Pneumatic test medium shall be dry air or Nitrogen.

Alternative test fluids shall be previously approved by BUYER.

INTERNA

B.3.6 Test Pressure

The test pressure shall be as indicated I-ET-3010.00-1200-200-P4X-001. As a minimum the test pressure shall be 110% of the design pressure, adjusted for the allowable stress at the test temperature.

Any component that would limit the pneumatic test pressure shall be removed prior to testing.

B.3.7 Test Temperature

Same as required for the hydrostatic test (Appendix A).

B.4 TEST PROCEDURE

B.4.1 Vents and Drains

Process start-up and maintenance vents and drains shall be used for pneumatic test. These vents and drains are indicated on the isometrics.

No additional vents and drains needed for this test.

B.4.2 Exclusion Zones

Same as required for the hydrostatic test (Appendix A).

B.4.3 Exclusion Zone Calculation

The stored energy shall be calculated as stablished in ASME PCC-2. When using air or Nitrogen it may be calculated by the following equation:

$$E = 2{,}5 \times P_{at} \times V \left[1 - \left(\frac{P_a}{P_{at}} \right)^{0{,}286} \right]$$

Where:

E is the stored energy (Joules)

Pa is the absolute atmospheric pressure (101 kPa)

Pat is the absolute test pressure (Pa)

V is the total volume under test pressure (m3)

The minimum distance between all personnel and the equipment being tested (R) shall be the greater of the following:

(1) R = 30 m for E ≤ 135 500 000 J

(2) R = 60 m for 135 500 000 J < E ≤ 271 000 000 J

(3) The radius obtained from the following equation:

$$R = 20 \times \left(\frac{E}{4266920} \right)^{1/3}$$

INTERNA

B.4.4 Gauges and Measures

Same as required for the hydrostatic test (Appendix A).

B.4.5 Preparation for Testing

Same as required for the hydrostatic test (Appendix A).

A safety valve shall be installed in the system for the pneumatic test. The set pressure shall be adjusted to the test pressure plus 345 kPa (50 psi) or 10% above the test pressure, whichever is less.

B.4.6 Applying Pressure

Same as required for the hydrostatic test (Appendix A).

B.5 END OF TEST

Same as required for the hydrostatic test (Appendix A).

B.6 REINSTATING

Same as required for the hydrostatic test (Appendix A).

INTERNA

APPENDIX C – WATER FLUSHING

C.1 SCOPE

This Appendix stablishes requirements for the cleaning of the piping system by water flushing.

Retro-Jetting is a recognized alternative to conventional flushing techniques and shall be applied when corrosion encrustations are present.

C.2 REQUIREMENTS

A written procedure shall be issued with all the applicable details for performing the cleaning method. The procedure shall be approved by BUYER.

The flushing operations may be waived if the visual inspection of the piping indicates that the system is free from dirt, debris, or foreign materials. The visual inspection of the piping interior shall reach the whole length of the pipe system, as well as all and every equipment that will be part of the system to be cleaned later on. This inspection shall be performed with the aid of a borescope, so that the whole internal surface is examined. A report shall be issued and approved by BUYER.

Critical services such as (a) Chemical supply to sub-sea umbilical, (b) Water based hydraulic fluid supply to sub-sea umbilical systems require high velocity water flushing (at 1.5 times the design flow with a minimum of 1.2m/s but not exceeding 3m/s). The flushing medium used for the critical services will be (a) water-glycol mixture (70:30) for the chemical supply to sub-sea umbilical, (b) MacDermid HW443 for water based hydraulic fluid supply to sub-sea umbilical. Flushing of the critical services will be carried out to a cleanliness level of NAS1638 Class 6.

C.3 PREPARATION

All items that could be damaged resulting from flushing shall be blanked off, or removed from the system, protected, and stored. Spools that replace removed equipment shall be of same material of line to be cleaned. These items may include the following:

- Safety and thermal relief valves.
- Control valves, including chokes.
- Manual valves.
- Check valves.
- Process filters.
- Strainer baskets.
- Instrument components such as: orifice plates, rupture discs, pressure gauges, probes, transmitters, etc.
- Nozzles of deluge piping.
- Sprinkler heads.
- Turbine and positive displacement meters.

These items shall be re-installed prior to the High-Pressure Leak Test.

INTERNA

The inlet nozzle of heat exchangers shall be disconnected to avoid the entry of dirt inside the tubular bundle or printed circuit.

All piping shall be adequately supported. Temporary supports shall be provided if additional stability is deemed necessary.

Spring supports shall be locked.

All ancillary fittings used are rated for the correct pressure involved (e.g., temporary piping, spades, blanks, caps, etc. shall withstand the cleaning pressure). Upon completion of the cleaning, all ancillary fittings are to be removed and the system returned to a state of compliance with the P&ID.

All lines shall be checked to ensure they are clear of debris that may have accumulated during fabrication, installation, and erection. Wherever practical, all the lines shall be blown down with compressed air prior to flushing.

In closed circuits, temporary filter with stainless steel mesh 40 screen shall be installed in the inlet and outlet of the system to be water flushed.

C.4 GENERAL REQUIREMENTS

Systems which are open to atmosphere such as vents, open safety valve discharges and hose station branches (water and compressed air) do not require flushing but shall be blown down (see Appendix D) to ensure that the lines are clean and not restricted.

Package units that have been cleaned and tested at the manufacturer need not be flushed again.

SELLER to prove flow velocities during the flushing by flow indicator, or by pump capacity.

Deluge nozzles shall be replaced with screwed plugs manufactured from the same material as the nozzle and remain in place until cleaning is complete. Carbon steel plugs can be used but shall be removed promptly after cleaning.

When lines are broken for cleaning, on completion of cleaning those broken connections shall be reinstated using new gaskets, except metallic ring joints that could be re-used if found in good condition after careful inspection.

SELLER shall be responsible for taking all safety precautions during flushing (e.g., to avoid excessive pressure in the system).

Temporary equipment used during cleaning shall be colour easily identifiable to facilitate the removal/reinstatement phase of the cleaning. This should include, but not be limited to, items such as blind flanges, spades, temporary test spools, caps, plugs, etc.

C.5 FLUSHING REQUIREMENTS

The medium used for flushing shall be same as that required for the pressure test, see A.3.5.

Lines to be thoroughly dried after cleaning according to Appendix D.

Piping systems where the flushing medium is water, flow velocities of 1.5 to 2 times the normal operating velocity or 5 m/s whichever is greater shall be achieved. If desired velocity cannot be obtained retro-jetting may be used.

INTERNA

The cleaning period with water flowing through the discharge point will be 3 to 5 minutes, or until the discharged water has a clean appearance, whatever is longer.

The main headers shall be cleaned out first and then all the branches, which connect to any equipment. All necessary precautions shall be taken to ensure that debris is not flushed into associated equipment or dead ends. The main headers shall be flushed for not less than 30 minutes and branches for not less than 15 minutes.

Fire mains and all connections supplying deluge systems, fire hydrants, monitors or sprinkler systems are to be cleaned prior to connection of that system. Any blockage of the pipework shall be cleared, and the system re-cleaned.

All deluge and sprinkler systems shall be cleaned separately to clear all foreign material and obstructions prior to testing.

C.6 CLEANING PROCEDURE

Systems shall be flushed or blown down from the highest point in the system, except for Retro-Jetting, which shall be done from the lowest point in the system. Additional flushing points may be required, and these shall be indicated in the individual system procedures/packages.

Flushing of pipe systems into tanks and vessels is not permitted.

Flushing water discharges shall be diverted to a suitable drain.

Suitable precautions and adequate measure shall be exercised when flushing any system during periods of low temperature. Flushing is not permitted at sub-zero temperatures.

Retro-Jetting is a recognized alternative to conventional flushing techniques.

Where piping configuration or flow rate constraints make satisfactory flushing impractical, SELLER may insist on retro-jetting to ensure cleanliness of piping systems.

Retro-Jetting is basically a high-pressure hose with a spray nozzle attached at one end. The spray nozzle pattern forces the water projection out toward the sides of the pipe and back toward the direction of the hose. This action propels the nozzle and hose forward while washing the pipe walls. Retro-Jetting uses less water and is much faster than flushing the line with normal pumps. Hose shall be pulled back under pressure. The minimum pressure shall be 400 bar and minimum water consumption shall be 125 litres/minute.

C.7 POST - CLEANING PROCEDURE

When cleaning is completed, make sure that all the vents are open, to prevent vacuum formation during drainage.

Remove all spools, filters and fittings that were installed for the cleaning process.

Reinstall all valves, flow elements and pipe fittings.

Reinstall all system instruments, keeping the block valves closed.

All disconnected flanges shall be reassembled.

All cleaned pipes will be labelled on site. The labels shall indicate the cleaning registration number.

INTERNA

APPENDIX D – AIR BLOWING

All requirements of Appendix C are applicable, with following exceptions and modifications:

- Blow-out medium is compressed air or inert gas.
- The fluid shall be oil free and dry.
- Air discharge shall be directed with particular regard to personnel safety.
- The flow velocity should not be less than 35 m/s.

INTERNA

APPENDIX E – SHOCK BLOWING CLEANING

E.1 SCOPE

This Appendix is intended to detail the piping cleaning process using compressed air at low pressure, between 3 and 7 bar. The piping portion to be tested has a vent exit closed with a weak element that burst during pressurization. The burst cause rapid depressurization and a drag force expels dust, small solids, and any particle possible to be expelled.

E.2 REQUIREMENTS

A written procedure shall be issued with all the applicable details for performing the cleaning method. The procedure shall be approved by BUYER.

E.3 APPLICATION

This cleaning method applies to piping portions in which dust, small solids, loose items can be removed by drag forces. High volume and heavy debris and parts need to be removed by another means. It is recommended to inspect the piping prior to shock blowing and remove any big object by fishing. The visual inspection may be performed through opened flanges or even through borescope.

This cleaning method applies to any system, including gas system, but it is necessary to check if the drag force could damage any internal element, instrument, and equipment. strainers, filters, thermowells, control valves, choke valves, check valves, orifice plates, appurtenances, flow elements, etc. They shall be removed prior to shock blowing. This cleaning method is not recommended for vessels with internal deflectors, molecular sieves, and heat exchanger. In case of applying this procedure to any equipment including gas compressor, it shall be written authorized by Vendor, otherwise the equipment shall be isolated from the test. Vendor shall indicate all the requirements and conditions to assure equipment integrity for this cleaning method.

Specific shock air blowing procedures and acceptance criteria shall be adopted for some Equipment as required by Vendors, such as suction lines for gas compressors and process lines of low clearances control valves (like antisurge valves, spillback valves).

E.4 PROCEDURE

The previous activities for the shock blowing shall be done in a care way. It shall be done a complete and detailed project analysis through PID, isometrics, 3D model and as-built verification on the field.

Instruments, filters, strainers, valves shall be inspected and removed. Major attention to any element that could prevent debris expulsion.

It shall be defined for each piping segment to be cleaned, the compressed air inlet and the burst outlet. Normally these points are flanged.

At the burst outlet may be used one or two gaskets. For two gaskets the burst pressure may reach 7 bar, hence a higher pressure, and a higher drag force.

The burst exit shall be isolated to avoid accident during explosion.

To install the gaskets at the burst exit it shall be necessary to use a counter flange with stud and nuts with the same specification of the pipe.

The gasket may be like a blank 1,6 mm thick of rubber or paper.

INTERNA

The air supply shall be instrument air.

Never perform this procedure before hydrotest for safety reasons.

The shock blowing is considered a safe method. The air supply is at about 8 bar for instrument air. This pressure causes no harm to any system even though the gasket doesn´t blow. Never use nitrogen to do this cleaning because nitrogen pressure can reach higher values.

INTERNA

APPENDIX F – BORESCOPE/VIDEOSCOPE INSPECTION

F.1 PURPOSE

This Appendix sets technical requirements for the inspection to be performed on piping and equipment to which they are connected (static and dynamic equipment), with the aid of a videoscope (borescope).

The intent of this inspection is to check the internal cleanliness and weld roots of the pipework and associated equipment, stablishing the need and the method for the following cleaning and commissioning activities.

A written procedure shall be issued with all the applicable details for performing the inspection. The procedure shall be approved by BUYER.

F.2 EQUIPMENT USED FOR VERIFICATIONS

The videoscope equipment shall essentially be suitable for the inspection being performed. Longer probe lengths shall be preferred, as it will help reduce the number of pipe locations (flanges/valves) to be opened to enable inspection.

Piping NPS equal or over 1 ½ '' shall be inspected with the aid of a borescope.

The controller shall be equipped with a monitor and the probe tip shall be articulated, with its direction being controlled by the handheld joystick.

Additional accessories shall be provided in accordance with the inspection scope. This may include but are not limited to centring guides and pipe crawlers.

The suitability of the equipment shall be demonstrated to the SELLER by the SELLER. If videos and/or still images taken by the equipment from actual inspections are not considered adequate (for evaluation of the weld roots and of the internal cleanliness) equipment more suitable shall be provided by the SELLER.

F.3 PROCEDURE / PERSONNEL

A Videoscope Inspection Procedure shall be issued by the SELLER.

The videoscope inspection shall be supervised and performed by the SELLER Inspectors and witnessed by BUYER. Full videos from all inspections shall be saved and submitted for BUYER evaluation. Still images shall be included in the reports which shall also be submitted for BUYER.

The inspection shall always be carried out by experienced personnel. The final evaluation of the images shall be performed by QC and Commissioning inspectors from the SELLER.

F.4 ACCEPTANCE CRITERIA

The videoscope inspection will be considered approved after the videos and the still images are evaluated and approved by QC and Commissioning Inspectors.

As a minimum the following shall be evaluated:

- No loose dirt or foreign materials are allowed inside the piping/equipment.
- No corrosion/oxidation/contamination is allowed in CRA materials.
- No major oxidation, loose scale adhered mill scales, or pitting is allowed in any material.
- After chemical cleaning no oxidation is allowed in any material.

INTERNA

- No heat tint is allowed in the welds of CRA materials.
- No weld defects are allowed in any material. Welds defects shall be evaluated as by the design code.
- No water or any other fluid is allowed inside the piping/equipment.

In case the piping/equipment is not considered approved, the appropriate actions shall be taken in order to correct the deviation, and the videoscope inspection shall be repeated afterwards.

A report of a borescope internal inspection is madatory.

INTERNA

APPENDIX G – DRYING

G.1 SCOPE

This Appendix stablishes requirements for the drying of systems, including piping, accessories, and equipment to which they are connected.

G.2 REQUIREMENTS

A written procedure shall be issued with all the applicable details for performing the drying. The procedure shall be approved by BUYER.

Special attention shall be given to piping dead legs, low points of piping, drains and lower part of valves connected to the system. Preferably part of the blowing operation shall be performed through all these parts, including valve body drains.

Dew point shall be measured at outlet of system that is being dried.

Other methods (e.g., vacuum drying or shock blowing) may also be used if the same dryness can be documented.

G.3 ACCEPTANCE CRITERIA

All systems shall be dried by checking water accumulation in drains and blowing dry air. Drying shall be followed by preservation to keep the pipe system completely dry and to avoid condense.

Systems with drying requirements as those that operate with dry gas, fuel oil, instrument air, and Nitrogen (See Appendix N) shall be dried out with dry and oil free air with a dew point not higher then - 10ºC. Drying can be terminated when the dew point at the outlet is equal to the dew point at the inlet. Drying shall be followed by preservation to keep the pipe system completely dry and to avoid condense.

INTERNA

APPENDIX H – CHEMICAL CLEANING – CARBON STEEL

H.1 SCOPE

This Appendix stablishes requirements for the chemical cleaning of carbon steel systems, including piping, accessories, and equipment to which they are connected.

A written procedure shall be issued with all the applicable details for performing the cleaning method. The procedure shall be approved by BUYER.

H.2 APPLICABLE SYSTEMS

As a minimum the following piping systems shall be chemically cleaned:

- Seal gas or other seal fluids.
- Fuel oil/gas.
- Relevant part of gas compressor suction (from scrubber vessel to compressor suction and anti-surge valve path).
- Anti-surge control valve path.
- Cooling and heating closed water systems.
- CO2 membrane Pre-Filter downstream lines.
- Relevant part of gas PCHEs – Printed Circuit Heat Exchangers and plate heat exchangers suction lines (i.e from compressor discharge to PCHE inlet).
- Amine supply.

H.3 ITEMS TO BE REMOVED

For equipment such as turbines, generators, pumps and compressors, the piping to be cleaned shall have all sensitive items that can be damaged by the cleaning medium removed or blanked off.

H.4 CLEANING METHOD

A Chemical Cleaning Procedure shall be issued and shall describe in detail the steps for chemical cleaning and shall include at least, but not be limited to:

- Degreasing.
- Chemical cleaning/descaling.
- Passivation.
- Disposal of all rejected material from the chemical cleaning process.

Neutralization, water flushing and drying shall be included in procedure if the chemicals used may cause material degradation.

INTERNA

The result shall be a clean smooth surface. Maximum temperatures used during these operations shall not exceed maximum design temperature of the systems.

Heat exchangers that are part of the process shall not be used as a mean of heating any of the chemical solutions. Process pumps shall not be used to circulate the chemical solutions. The Chemical Cleaning SELLER shall furnish all equipment necessary for the cleaning process.

The systems to be cleaned shall have high and low point vents and drains installed. "Dead legs" shall be avoided.

To avoid flash corrosion, system temperatures shall be reduced before draining and opening to atmospheric condition.

H.5 MARKING

Piping spools or systems that have been chemically cleaned shall be marked in a unique manner.

INTERNA

APPENDIX I – CHEMICAL CLEANING – CRA

I.1 SCOPE

This Appendix stablishes requirements for the chemical cleaning of stainless steel systems, including piping, accessories and equipment to which they are connected.

A written procedure shall be issued with all the applicable details for performing the cleaning method. The procedure shall be approved by BUYER.

I.2 APPLICABLE SYSTEMS

For the following piping systems chemical cleaning is mandatory:

- Seal gas or other seal fluids.
- Fuel oil/gas.
- Relevant part of gas compressor suction (from scrubber vessel to compressor suction and anti-surge valve path).
- Anti-surge control valve path.
- CO2 membrane Pre-Filter downstream lines.
- Relevant part of gas Printed Circuit Heat Exchangers and Plate heat exchangers suction lines (i.e from compressor or vessel discharge to cooler inlet).
- Amine supply (piping +tubing).
- Sea water and injection water in austenitic stainless steel, duplex or super duplex.
- Hydraulic and Lube Oil systems if recommended by equipment vendor.

Chemical cleaning shall be also applied to all CRA piping (like austenitic, duplex and superduplex) where the visual inspection reveals the presence of oxidation and/or contamination in accordance with welding specification criteria. Heat tint from welding is also a reason for requiring chemical cleaning.

Chemical cleaning and passivation of stainless steel shall be according to ASTM A380. Alternatively, passivation according to ASTM A967 is also acceptable.

I.3 ITEMS TO BE REMOVED

Accessories that may be damaged by the chemical products shall be removed/isolated from the system prior to the cleaning operation.

I.4 CLEANING METHOD

A Chemical Cleaning Procedure shall be issued and shall describe in detail the steps for chemical cleaning. It shall include at least the following steps:

- Degreasing.

INTERNA

- Chemical cleaning/descaling.
- Passivation.
- Disposal of all rejected material from the chemical cleaning process.

Maximum temperatures used during these operations shall not exceed maximum design temperature for the systems.

For equipment such as turbines, generators, pumps and compressors, the piping to be cleaned shall have all sensitive items that can be damaged by the cleaning medium removed or blanked off.

I.5 MARKING

Piping spools or systems that have been chemically cleaned shall be marked in a unique manner.

INTERNA

APPENDIX J – OIL FLUSHING

J.1 SCOPE

This Appendix stablishes requirements for the cleaning through oil flushing of piping systems and the associated accessories.

A written procedure shall be issued with all the applicable details for performing the cleaning method. The procedure shall be approved by BUYER.

J.2 APPLICABLE SYSTEMS

Oil flushing is applicable to the following systems:

- Hydraulic systems.
- Lubricating systems.
- Sealing systems.

J.3 METHOD

Unless otherwise specified by Hydraulic Unit, Lubricating or Sealing system vendor, the required cleanness for systems subject to hot oil flushing is 15/13/10 according to ISO 4406.

A detailed procedure for hot oil flushing shall be written and approved by BUYER.

Recommended filters used for hot oil flushing are:

- ≤ 3 µm ABS for hydraulic systems (ABS mean absolute rated filter type);
- ≤ 10 µm ABS for lube and seal oil.

Filling of lubricant oil shall take place through filters with 10 µm ABS.

Flushing and sampling to verify cleanness shall take place at turbulent flow, upstream any filters. The fluid samples shall be representative of the system with two to three test points.

For effective removal of particles, it is necessary that the flushing flow be turbulent type, that is, the Reynolds number shall be R > 4000. In most cases the best way to achieve a turbulent flow is reducing the viscosity of the flushing fluid, what can be done increasing its temperature. Maximum temperatures used during these operations shall not exceed maximum design temperature for the systems.

The oil used for flushing shall be equivalent to the oil used in operation. The oil viscosity shall be lower than or equal to the viscosity of the oil used in operation.

Flushing oil shall, if possible, remain in the system after completion of flushing. Preservation shall be performed, either by inert gas overpressure, chemical additive, or other suitable method as in Appendix K.

The level of cleanliness shall be documented from an automatic particle counter, or a membrane checked in a microscope before a flushing operation is considered finalized.

A flowmeter shall be installed to verify flow used during flushing operation.

INTERNA

The maximum allowable water content in the oil used for flushing shall be below the oil maximum water absorption capacity. This is to prevent precipitation of water droplets and potential water contamination of the system. Typically, water content shall be less than 300ppm, but both higher and lower values will be acceptable based on the individual oil water absorption capacity and on Equipment manufacturer requirements.

J.4 Marking

Piping spools or systems that have been oil flushed shall be marked in a unique manner.

INTERNA

APPENDIX K – PRESERVATION OF PIPING SYSTEMS

K.1 SCOPE

This Appendix stablishes requirements for the preservation of piping systems and the associated accessories, equipment, and instrumentation.

Preservation as herein described is not applicable in the following cases:

- Cu-Ni piping: no internal preservation needed. Shall be protected from contamination from outside sources.
- Glass Reinforced Plastic piping and equipment: no preservation needed.
- PVC/CPVC piping: no preservation needed.
- Organic coated piping and equipment: shall be kept dry and clean.

Different preservation methods and/or exceptions to the preservation requirements presented below shall be presented to BUYER for approval.

A written procedure shall be issued with all the applicable details for performing the preservation. The procedure shall be approved by BUYER.

Piping/systems that have been chemical cleaned shall be immediately preserved with nitrogen pressurization or VCI. Lack of preservation is not accepted at any time after chemical cleaning.

K.2 PRESERVATION MOMENTS

Preservation of the systems shall be performed on two separate occasions. In both cases the preservation shall be in accordance with one of the methods herein described.

K.2.1 Preservation of sub systems

After all cleaning and drying operations are performed (and approved by means of a videoscope inspection as per Appendix F) a final assembly phase is started, when the system shall be fully reassembled, including the reinstating of all components that have been removed during the execution of the previous steps.

The next step of the commissioning is the High-Pressure Leak Test (as per Appendix L), and for this test the maximum number of lines and equipment shall be connected in order to reduce the number of tests and reduce the number of untested joints (which connect the separate leak test systems).

This means that as the systems are cleaned and are waiting for the final Leak Test they shall be properly preserved.

K.2.2 Final preservation of systems

After the final Leak Test has been performed and approved the system shall be preserved in order to be kept in condition for the initial operation.

INTERNA

K.3 PRESERVATION METHODS

K.3.1 Nitrogen Preservation

The main purpose of the nitrogen injection for preservation (inertization) is to reduce the Oxygen percentage contained in the interior of equipment and lines, aiming at preserving their integrity, avoiding a possible deterioration process by oxidation or contamination.

The following steps shall be followed:

- The system shall be equipped with a manometer with a blocking valve and purge valve in a place of easy viewing. These shall be kept in place for the whole period in which the system will be kept preserved. Therefore, the manometer shall be protected against mechanical shocks, in order to avoid an accidental depressurization.
- When preserving sub systems (as described in item K.2.1 above) the system may be initially pressurized with compressed air (pressure below 0.5 kg/cm2). This shall reveal major leaks which shall be corrected before applying the Nitrogen. This is not applicable when applying this method to the final preservation of systems (as described in K.2.2 above) since there should be no leaks in the system.
- After the compressed air pressure has stabilized (all leaks taken care of) the system shall be drained to atmospheric pressure.
- Nitrogen shall finally be injected to purge the system. As Nitrogen is injected the Oxygen content shall be measured at a vent as far away from the injection point as possible.
- When the Oxygen content reaches a value below 5% the vent may be closed, and pressurization of the system commence. The final pressure of the system shall be kept between 1 and 2 kgf/cm2 at module phase and the operation pressure at the end of integration phase.
- Check the residual oxygen concentration at high and random points of the system. If any measure indicates Oxygen content above 5% the purging operation shall be resumed.

K.3.2 Volatile Corrosion Inhibitor (VCI) Preservation

Preservation using VCI is an acceptable alternative to preservation with Nitrogen. They are used to provide corrosion protection to metal components in enclosed areas during long-term storage.

For VCI preservation, a specialist SELLER shall oversee the materials and methods applied. This SELLER shall prepare a system-by-system VCI preservation procedure, attaching boundary markup drawings / illustrating the isolation/inspection/venting/injection points etc. and submit the procedure for review /approval of BUYER.

The VCI preservation method depends on several factors, from the type of equipment (piping, vessel, tanks, rotating equipment, and so on), the internal volume of the system to be protected, and the VCI product form.

For VCIs to perform at maximum efficiency, the surface of the item being protected shall be clean. Contaminants such as dust, oil and grease affect the VCI's ability to coat and protect the substrate.

In addition, a continuous exchange of air within the enclosure such as by subsequent opening and closing can disperse the protective layer, therefore increasing the potential for corrosion.

INTERNA

The VCI corrosion protection system shall be designed with the aid of the VCI product supplier. Application of the product shall be performed by the VCI supplier personnel, or by people trained by them.

When preserving sub systems (as described in item K.2.1 above) it is recommended that the system is initially pressurized with compressed air (pressure below 0.5 kg/cm2). This shall reveal major leaks which shall be corrected before applying the VCI. This is not applicable when applying this method to the final preservation of systems (as described in K.2.2 above) since there should be no leaks in the system.

After the VCI product has been applied the protection efficiency shall be periodically checked.

K.4 PRESERVATION MAINTENANCE

K.4.1 Nitrogen Preservation

For the first two weeks the preserved systems shall be checked daily. After two weeks the system may be checked once every two days.

The verification shall include checking the manometer indication as well as a fast purging of the installed purge valve.

At least once a week the Oxygen content shall be checked (shall always be below 5%).

System purge and pressurization shall be repeated as needed.

K.4.2 Volatile Corrosion Inhibitor (VCI) Preservation

VCI loses its efficiency if the system environment is not kept closed. Since there is no pressure applied to the system it is harder to know whether the system is still being protected by the applied VCI.

The VCI corrosion protection system as designed by the supplier shall include means of testing the environment for the VCI efficiency, and this check shall be performed every 15 days.

VCI application shall be repeated as needed.

K.5 SIGNALING

Fix warning plates in places of easy viewing, indicating that the system/equipment is preserved (applicable for both methods) and pressurized (applicable for the Nitrogen preservation).

At any moment if there is any evidence that the system may have been tampered with it shall be properly inspected and the preservation once again performed.

INTERNA

APPENDIX L – LEAK TESTING OF SYSTEMS

L.1. SCOPE

This Appendix stablishes requirements for the final High Pressure Leak Testing of systems, including all piping and associated process equipment and instruments.

This test can only be applied after the system have been fully reassembled, including the reinstating of all components that have been removed during the execution of previous steps, such as the pressure tests, flushing operations or cleaning activities.

Systems shall be organized to include the maximum number of lines and equipment to minimize the number of tests to be performed. The maximum leak test pressure shall always be observed so that components are not tested with a pressure higher than the maximum allowed, or higher than the pressure strength test previously applied (hydrostatic test or pneumatic test, as per Appendix A or Appendix B).

For GRP piping leak tests, special requirements listed in I-ET-3010.00-1200-200-P4X-003 as longer test periods are mandatory when not in accordance with this specification.

L.2. PREPARATION FOR LEAK TESTING

L.2.1. System Test Folder

A system test folder shall be prepared prior to the testing. As a minimum the following shall be a part of the folder:

- Front page (with test system identification).
- Marked P&ID identifying limits of the system.
- Pressure test certificates.
- Cleaning Certificates.
- Mechanical Completion check list (system reinstating).
- System Visual Inspection Report.
- Calibration Certificate of test instruments.
- Schematic drawing containing all connections, vents, drains, manifolds, and accessories for the test, including material list (ISOTEST).

L.2.2. Visual Inspection Prior to Testing

A visual inspection of the system to be tested shall be performed before starting the setup of the test. The main goal of this inspection is to make sure that the system is ready to be tested, and that all previous steps/activities have been performed and approved.

This visual inspection shall be performed by a Commissioning Inspector, and shall evaluate the following, as a minimum:

- Previous manufacturing / inspection / testing / cleaning steps have been completed and approved.

INTERNA

- All temporary blinds/spectacles/plugs/spades have been removed.
- Temporary spools pieces have been removed (the applicable instrument reinstalled).
- All and every equipment and instrument have been connected to the system.
- All flanged connections that were disassembled since the pressure test (temporary joints) have properly reassembled and retightened, in accordance with the appropriate tightening procedure.

  Note: Special attention shall be given to the gaskets on the flanged joints. Only gaskets according to the piping specification or isometric drawing shall be used.
- All flanged connections, including those previously approved during the pressure test, shall be prepared for the bubble test (for the systems being tested with compressible fluids);
- Expansion joints and spring hangers shall be released. Strainers shall be reinstalled.

The inspector shall make sure that all connected components are suitable for the Leak Test pressure.

Since this is the last step prior to commencing the operation of the system it is paramount to certify that no additional work will be needed to the system.

A Visual Inspection Report shall be issued with all relevant information.

L.3. LEAK TEST SELECTION

L.3.1. Main Selection Criteria

The Leak Test method shall be selected as follows:

- Systems with design pressure ≤ 8 kgf/cm2: leak test may be performed with compressed air, clean and dry, except where the process conveyed fluid maybe flammable or combustible (same quality as for the drying operations – Appendix G).
- Systems that operate with non-flammable and non-combustible liquids: leak test may be performed with fresh water (same quality as for the hydrostatic test – Appendix A).
- Systems that operate with non-flammable and non-combustible gases: leak test shall be performed with Nitrogen.
- Systems that operate with flammable or combustible fluids: leak test shall be performed with a mixture of Helium and Nitrogen (1% Helium with 99% Nitrogen) at integration phase. At module phase this test may be executed with Nitrogen only.
- Systems open to atmosphere: leak test shall be performed by filling the lines with water (same quality as for the hydrostatic test – Appendix A).
- Hard pipes shall be leak tested at the integration phase. Machined mock-ups with blind flanges simulating the riser top connector shall be installed at Lower Riser Balcony
- Vacuum systems as accommodation toilet and deaerator towers shall be leak tested and later kept 24 hours with a vacuum pressure of 200 mmHg (26,6KPa abs). No more than 10% losses are acceptable.

The following list identifies some of the typical systems and the applicable method for leak testing:

INTERNA

L.3.2. Systems/Fluids to be Helium + Nitrogen Leak Tested (99% N2 and 1% He)

- Process systems (P and PC).
- Produced water systems.
- Closed drain systems.
- Flare systems.
- Fuel gas system.
- Seal gas conditioning skids/panels.
- Injection Water.
- High Pressure systems (#900 and greater).

L.3.3. Systems/Fluids to be Nitrogen Leak Tested

- All Non-flammable / Non-combustible gases.
- Diesel Oil.

L.4. NITROGEN/HELIUM LEAK TEST (N2/HE)

- For Nitrogen Helium Leak Testing (N2/He), a specialist SELLER shall be in charge of test execution and prepare a system-by-system N2/He leak test procedure, attaching boundary markup drawings / illustrating the test set up for isolation/bleeding/venting/N2-He injection points etc. and submit the procedure for review /approval of BUYER.
- The specialist SELLER in charge of the tests shall have previously experience in similar services in at least 10 FPSOs with high pressure piping (400 bar or greater).
- The N2/He leak tests shall be performed by a team of specialist SELLER based on approved procedure and all test record are compiled with a separate N2/He leak test dossier for all tested systems and handed over separately.
- A 1% Helium/99% Nitrogen test gas mixture shall be injected into the system, in incremental stages, until the nominated test pressure is achieved (typically at 90% of PSV set pressure/design pressure).
- Once test pressure is stable, a gas sample is taken by the specialist SELLER team from the system and used to calibrate a helium sensitive mass spectrometer by a flow calibration instrument with a valid certificate.

INTERNA

- The leak testing process then begins. A leak detection probe shall be inserted into each taped joint sequentially by specialist SELLER team. A vacuum pump draws a gas sample from the joint back to the mass spectrometer, via flexible hosing.
- The mass spectrometer analyses the gas sample for helium content and displays a quantified reading if helium is present.
- Any joints leaking above the maximum allowable threshold are physically tagged and a leak number allocated (sequentially). The leak location and numbers are marked on a set of P&IDs, and the details recorded on a Leak Description Report form.
- Testing continues until all potential (or disturbed/nominated) leak sources have been checked.
- Tubing and threaded connectors may be tested with bubble.
- The system is then depressurized, and the Leak Description Report issued by specialist to the SELLER further action.
- When all repair work is completed, the system is prepared, pressurized, and tested again to ensure the repaired joints are leak-free or leaking below the maximum allowable threshold.
- The above process is repeated for each identified test pack.
- Post N2/He leak test the system pipe work is left with low pressure Nitrogen as blanketing / preservation purpose.

L.5. WITNESS JOINT

Joints that are dismantled after leak test, left deliberately untested, or are not part of the leak test boundary shall be labelled as a "witness joint".

All “witnessed joints” shall be labelled with a red tag to signal the untested joint.

The tag shall contain the following statement: “UNTESTED JOINT – BE AWARE”.

Witness joints shall be tested individually before sail away. When pressure test is not possible other means of verification as torque control verification may be acceptable, under BUYER approval.

Tubing connections “witness joints” shall be dismantled, internally inspected to assure proper crimping and re-assembled by a qualified professional.

All witness joints shall be tracked and managed with regard to assembling and testing.

INTERNA

L.6. VALVES SEAT TEST

- During Leak Test execution, the seat of special valves shall be evaluated by N2/He specialist SELLER by ultrasonic equipment (Echologics Leak Listener or similar).
- Leaks in valve seats may be confirmed by opening a vent in a trapped downstream piping if available.
- Ultrasonic leak detection utilizes high-frequency sound produced by a pressurized gas escaping from a valve to identify a leak.
- Special valves shall be considered as following: all SDVs and BDVs valves, all VSL-3 and VSL-4 block valves, PSV block valves and all other valves considered critical by BUYER.
- During test execution any identified valve passing shall be reported and repaired.

L.7. TEST EQUIPMENT

The Leak Test equipment shall fulfil the same requirements as for the strength pressure testing of the system. Follow Appendix A when testing with incompressible fluids and Appendix B when testing with compressible fluids.

For the Helium + Nitrogen test method a mass spectrometer shall be made available for testing. It shall be calibrated and have the sensitivity in accordance with the ASME BPV Code Section V Appendix IV Article 10.

L.8. TEST DETAILS

L.8.1. Pressure

The pressure shall be 0.90 times the setpoint value of Pressure Safety Valves (PSV) involved at circuit or 90% of the design pressure for systems with no PSV. Special cases to be previously agreed with .

L.8.2. Test Scope

All flanges possible leaking points as tubing connectors, valve and equipment parts, mechanical connectors, and threaded joints.

L.9. TEST PROCEDURE

L.9.1. Exclusion Zone and Safety

Exclusion zones for the leak test may fulfil the same requirements as for the strength pressure testing of the system (Appendix A), except that even when leak testing with compressible fluids the requirements of the pneumatic test need not be applied.

Flexible hoses shall be equipped with safety devices to prevent hose whip events in case they accidentally disconnect.

During the inspection only those attending the test shall be inside the exclusion zone.

INTERNA

L.9.2. Filling and Emptying

Filling and emptying for the leak test shall fulfil the same requirements as for the strength pressure testing of the system. Follow Appendix A when testing with incompressible fluids and Appendix B when testing with compressible fluids.

L.9.3. Gauges

Gauges for the leak test shall fulfil the same requirements as for the strength pressure testing of the system. Follow Appendix A when testing with incompressible fluids and Appendix B when testing with compressible fluids.

L.9.4. Applying Pressure

Applying pressure for the leak test shall fulfil the same requirements as for the strength pressure testing of the system. Follow Appendix A when testing with incompressible fluids and Appendix B when testing with compressible fluids.

Care shall be taken not to accidentally pressurize systems adjacent to the one under test. The process flow direction shall be followed during pressurization.

Pressure shall be gradually applied. A 5-minute stabilization hold time at every 25% of the test pressure applied shall be adopted when using compressible fluids.

The test pressure shall be maintained for a minimum of 60 minutes.

When testing with a compressible fluid (Compressed Air, Nitrogen or Helium) all connections shall be checked for leak with a bubble test or probe. The connections shall be wrapped with masking tape and bubble forming solution sprayed over a small punctured hole on the tape. No leakage or bubble forming is allowed.

No correction may be made in the system when under pressure. After all corrective actions have been taken the Leak Test can be resumed.

L.9.5. Acceptance Criteria

(a) Helium + Nitrogen Test: No leakage. No more than 5% pressure drop. No more than 50 Sft^3/year leak rate.

(b) Nitrogen or Compressed Air Test: No leakage. No more than 5% pressure drop. No bubbles at the connections.

(c) Sea Water or Fresh Water Test: No leakage.

L.10. End of Test

Systems that have been successfully tested in accordance with this Appendix shall be submitted to the final preservation as stablished in Appendix K.

A Leak Test Report shall be issued by the Commissioning Inspector. This shall include at least the following:

- Date of test.
- Identification of the system.

INTERNA

- Identification of the personnel involved.
- Visual Test Report that cleared the system to be tested.
- Test method, test procedure, test pressure, test results.
- Report of the valves tested.
- Pressure and temperature chart.

L.11. Sweep Test

After finishing leak tests, a sweep test with Nitrogen shall be done in selected system.

The sweep test consists of the pressurization of combined leakage test packages. The sweep test shall be performed without breaking any flange torque. The sweep test pressure shall be 90% of lowest PSV pressure setting on the combined package. After sweep test approval the system shall be depressurized down to minimum 5 barg or any other higher value requested by BUYER.

As a minimum all Process gas (P), Process liquid (PC), Fuel Gas (FG) and CO2 (DOH) systems shall be sweep tested. The inspections shall be by means of bubble tests. Abseilers can be used to inspect inaccessible joints, instruments, and tubing.

Systems shall be separated by test pressure. Test pressure shall be the same as high-pressure leak test except for compressor that shall be tested with the inlet and outlet connected at settle out pressure.

INTERNA

APPENDIX M – ALTERNATIVE TO CHEMICAL CLEANING – CARBON STEEL

M.1 SCOPE

This Appendix stablishes requirements for the alternative chemical cleaning method of carbon steel systems, including piping, accessories, and equipment to which they are connected.

M.2 APPLICABLE SYSTEMS

Systems which are required to be chemically cleaned as part of its commissioning activities may be subject to this alternative method when approved by BUYER.

Since performing the chemical cleaning at a later stage of the system commissioning involves the removal of several accessories (such as valves) due to the acid feature of the cleaning solutions, a viable alternative consists on the use of chemical rust removers on the hydrostatic test water.

This cleaning method requires the water (with the applied chemicals) to be circulated through the piping system for some time, so that all rust if effectively removed.

After the pressure test and the cleaning operation the system shall be visually inspected in order to guarantee that all oxides have been removed. The system shall then be immediately put under preservation in accordance with Appendix K in order to keep it clean and rust free for the remaining of the time until the High-Pressure Leak Test (Appendix L).

Therefore, this cleaning method shall usually be associated with a VCI protection system.

Details on the method and quality controls applicable to it shall be detailed on a written procedure, which shall be submitted to BUYER for approval.

INTERNA

APPENDIX N – COMMISSIONING ACTIVITIES PER FLUID

	Spool Preservation			System Cleaning							Leak Test				System / Sub-System Preservation		
Fluid	Dry -10ºC	Close ends and seal the spool - All materials	VCI - carbon steel (Note 12)	Water Flushing / Hydro-jet	Air Blowing	Shock Blowing	Chemical Cleaning CRA (Note 1)	Chemical cleaning carbon steel (Notes 1, 2 and 7)	Oil Flushing	Borescope inspection	N2+He	N2	Water	Oil	Dry, clean, seal and Nitrogen pressuration	VCI - carbon steel (Note 12)	Dry, clean and seal
AM	x	x	x	x			x	x		x			x			x	x
ADW		x	x	x						x			x				x
STA / IN / SN / STA / IA	x	x	x		x	x				x		x				x	x
C / PCG / PLD / AO / BR		x	x	x						x			x			x	x
CI / CI2 /G / GL / CN		x	x	x						x			x			x	x
CNI	x	x	x	x						x			x				x
D / JF	x	x	x	x			x	x		x		x			x	x	x
DA / CV		x	x	x						x			x				x
DF / DFC		x	x	x	x	x	x			x	x					x	x
DO	x	x	x		x	x				x		x				x	x
DW		x	x	x						x			x			x	x
EG		x	x		x	x				x		x					x
F		x	x	x	x	x				x	x				x		x
FG		x	x		x	x	x	x		x	x				x		x
FL / FLC		x	x	x						x			x				x
FP			x								x					x	x
FW		x	x	x						x			x				x
GW/WW		x	x	x						x	Note 9		x			x	x
H / OL	x	x	x				Note 11		x	x				x	Note 5		Note 5
HWP / HF/ HWU		x	x	x				x		x			x		Note 8		x
IA / IN / IG / IGN	x	x	x	x	x	x				x		x				x	x
IW		x	x	x			x			x	x						x
IWC		x	x	x			x			x			x				x
P / DOH	x	x	x	x	x	x	Note 4	Note 4		x	x				x		x
PC		x	x	x	x	x	Note 4	Note 4		x	x				x		x
P / PC (Hard Pipe)		x	x	x						x	Note 10				x		x
PCW		x	x	x						x	x					x	x
PW / PWH		x	x	x						x			x			x	x
S / SC		x	x	x	x	x				x	x				x		x
SA / BG / GAS BLANKET		x	x	x	x	x				x		x				x	x
SW / BWG / BWH / ADW		x	x	x						x			x				x
TCR/TC/TR		x	x	x						x			x			x	x
W / SFW		x	x	x						x			x			x	x
W (cooling water)/CHW		x	x	x				x		x			x		Note 8		x

1- Not applicable for organic coated lines, non-metalic material and cooper-nickel material
2- For cooling water service spools at pipe rack and water injection module shall be galvanized or fabricated of galvized pipes and fittings.
3- Cooper Nickel spools don´t need to be chemical cleaned
4- See H.2 and I.2
5- H and OL may be fillled with oil and pressurized with Nitrogen for preservation
6 - Diesel lines from tank to equipments only. Jet Fuel all lines.
7 - Hydro Jetting at minumum 7.000 psi shall be done when necessary in addition to chemical cleaning
8 - The system may be pressurized with nitrogen or filled with water+Corrosion Inibitor
9- GW/WW and other Vacuum systems shall be leak tested with Nitrogen and later kept 24 hours with 200 mmHg vaccum (26,6KPa abs)
10- Hard pipes shall be leak tested at the integration phase. Machined mock-ups with blind flanges simulating the riser top connector shall be installed at Lower Riser Balcony level and later removed.
11- If recommend by equipment vendor
12- Recommended practice

INTERNA

APPENDIX P – REQUIREMENTS FOR WELDING INSPECTION

P.1 GENERAL REQUIREMENTS

The requirements listed below apply to all piping systems, designed as per ASME B31.1, ASME B31.3, ASME B31.4 or ASME B31.8.

Before any non-destructive testing, all welded joints shall be visually inspected (VT) to assure that the joint is free from defects and that the surface conditions comply with the preparation requirement for the NDT that will follow.

Visual testing (VT) of welds shall include a dimensional check of the welds, and a report shall always be issued.

The finished welds shall also be subject to internal visual inspection where promptly accessible. In the spool fabrication stage, a borescope shall be used for weld root inspection.

For piggable piping, the internal visual inspection (root side) is mandatory. This inspection shall be performed with the aid of a borescope.

When removing any temporary attachment welded to the pipe the surface shall be ground smooth and tested by liquid penetrant (PT) or magnetic particle (MT).

During visual inspection, any discontinuity like welding spatter, undercut, slag, pore, or arc strike shall be ground off. For arc strike the surface shall be tested by PT or MT.

The acceptance criteria for all the NDT shall be in accordance with design code, as applicable.

For piggable piping, the acceptance criteria for the root visual inspection shall be as follows: no lack of fusion, no incomplete penetration, no burn through and, internal protrusion shall be limited to 4.0 mm.

P.2 PIPING CLASSES

Piping Classes (I, II or III) shall be determined for all piping systems based on conveyed fluid, pressure, and temperature conditions according to IACS UR-P Rules.

Furthermore, Class I shall always be assigned for:

a) Piping in "Category M Fluid Service", "Severe Cyclic Conditions", “Elevated Temperature Fluid Service” and "High Pressure Fluid Service" (defined as per ASME B31.3).
b) Piping in pressure-temperature rating 1500# or higher.
c) Piping with internal metallic overlay.
d) Piping under “sour service”, “amine service” or “caustic service”.
e) Piping designed as per ASME B31.4 and ASME B31.8.
f) Piggable piping.

Welds between systems with different piping classes shall be inspected as per the most stringent examination requirement (higher Piping Class).

P.3 TYPE AND EXTENT OF NDT FOR PIPING

The type and extent of the NDT (VT, PT, MT, UT, RT) examination for piping systems shall be as determined in Table P.1.

INTERNA

Table P.1 – Type and Extent of NDT for Piping

Piping Class	Required NDT
I	- 100% VT and 100% dimensional check on all welds - 100% RT on butt-welded joints (all pressure retaining parts butt welds, longitudinal or circumferential, regardless of diameter) - 100% RT on all site fabricated branch connection welds (regardless of diameter). Connection details that are not prone to RT shall be inspected 100% by UT. Connection details that are not prone to RT and UT (e.g. olets, bosses, half-coupling) shall be inspected 100% by MT - 100% MT on all welds, including butt welds, socket welds, branch connection welds, and fillet welds (all pressure retaining welds shall be completely inspected by MT) - 100% MT on welds of support to pressure retaining parts
II	- 100% VT and 100% dimensional check on all welds - 10% RT on butt-welded joints (all pressure retaining parts butt welds, circumferential, regardless of diameter). Longitudinal butt welds shall be 100% inspected - 10% RT on site fabricated branch connection welds (regardless of diameter). Connection details that are not prone to RT shall be inspected 10% by UT. Connection details that are not prone to RT and UT (e.g. olets, bosses, half-coupling) shall be inspected 10% by MT - 10% MT on all welds, including butt welds, socket welds, branch connection welds, and fillet welds (all pressure retaining welds shall be 10% inspected by MT) - 10% MT on welds of support to pressure retaining parts
III	- 100% VT and 100% dimensional check on all welds - 5% RT for circumferential butt-welded joints of piping in "Normal Fluid Service" (defined as per ASME B31.3)

NOTES:

1) Except for "Category D Fluid Service" (as defined by ASME B31.3), all welds of piping NPS < 2 shall be 100% inspected by PT.
2) PT may substitute MT where the latter cannot be applied.
3) UT may substitute RT where the latter cannot be applied, provided that the requirements of the applicable design code are met (BUYER's approval is required).
4) PAUT may substitute RT where the latter cannot be applied.
5) "In Process Examination" (as defined in ASME B31.3) is not acceptable as a substitute for the NDT inspection requirements.

INTERNA

P.4 SAMPLING

When sampling test is indicated in item P.3, a percentage of the number of weld joints within the specified lot shall be selected, and the whole weld length of the selected weld joint shall be inspected (random examination).

A lot shall contain only:

- Welds from the same welder/welding operator.
- Welds of the same welding process.
- Welds of the same material (same P-Number or same piping Spec).
- Welds made during a period no longer 3 months.

Material grouping (P-Number) shall be as defined in ASME BPVC Section IX.

Pipe shop welds (for the fabrication of spools) and on-site welds (for the field assembly of piping) shall be grouped in separated lots. A lot shall not contain joints that still were not welded (all welds shall be finished and approved by VT).

P.5 PENALTIES

Penalties (progressive sampling for examination) shall be applied to the welder/welding operator responsible for the defective weld as defined in ASME B31.3.

The lot approval, replacement, repair, and re-examination shall be as stated in ASME B31.3.

Progressive sampling for examination shall be performed immediately after a defective weld is found.

Progressive sampling shall not be accepted as part of the minimum random examination requirements.

P.6 HARDNESS TESTING

Hardness of the welded joints shall be measured on the following cases:

- When required by the design codes.
- After post weld heat treatment.
- For all materials in special service (sour, amine, or caustic service) when required by the applicable service standard.
- For duplex and superduplex stainless steel and nickel steel.

The sampling and acceptance criteria for hardness testing shall be according to Table P.2.

Hardness procedure shall be according to I-ET-3010.00-1200-970-P4X-004 REQUIREMENTS FOR NON-DESTRUCTIVE TESTING (portable instrument, ultrasonic contact impedance (UCI) method, according to ASTM A1038).

Readings shall include weld metal, HAZ and base material as follows:

a) 3 spots on weld metal
b) 3 spots on each HAZ (except for fillet welds)
c) 1 spot on each base material

INTERNA

The maximum metal removal allowed, when preparing the surface, shall be 0.5 mm thick. The spot on HAZ shall be at maximum 0.5 mm from the fusion line.

Table P.2 – Hardness Testing Sampling and Acceptance Criteria

Application	Sampling	Remark
Piping spools with PWHT in the same furnace	10% of the total welded joints or minimum one joint	The selected joints for testing shall include the thicker welded joints (the one which required the longest heat treatment soaking time as per the design code). Acceptance criteria shall be according to design code, service standard or IOGP S-705, as applicable.
Piping welded joints with PWHT one by one	100%	Acceptance criteria shall be according to design code, service standard or IOGP S-705, as applicable.
Piping under sour service	10% minimum	Acceptance criteria shall be according to ISO 15156 standard. For materials that requires qualification by laboratory testing (not prequalified) according to ISO 15156 standard, the acceptance criteria shall be in accordance with the hardness limit of each qualified WPS, which shall be confirmed by a successful SSC test.
Piping under others special service	10% minimum	The acceptance criteria shall be as established in the applicable service standard.
Piping of duplex and superduplex stainless steel and nickel steel	10% minimum	For piping under non-special service, the acceptance criteria shall according to IOGP S-705

P.7 PMI

Positive Materials Identification (PMI) shall be applied to all materials except Carbon Steel.

The PMI shall be carried out on 100% of production welds with equipment capable of identifying the specified type of material in accordance with established procedure. Burn marks on the inspected material, if happen, shall be ground off.

The PMI shall be performed on the following moments:

- prior to the welding, in order to properly identify the materials which will be welded/assembled [Recommended Practice].

- after fabrication of the pipe spool is finished, testing for all base materials and welds (before releasing the spool from the pipe shop).
- after field joints are finished, checking all base materials not previously tested at pipe shop and all welded joints performed in the field.
- in piping supports welded directly to the piping wall.

PMI procedure shall be according to I-ET-3010.00-1200-970-P4X-004 REQUIREMENTS FOR NON-DESTRUCTIVE TESTING.

P.8 FERRITE TESTING

Duplex and superduplex stainless steel welds shall be checked for its ferrite-austenite ratio.

Ferrite testing procedure shall be according to I-ET-3010.00-1200-970-P4X-004 REQUIREMENTS FOR NON-DESTRUCTIVE TESTING.

All base materials shall be checked for ferrite-austenite ratio (100% ferrite testing), as follows:

a) Ferrite testing shall be performed at least in three (3) different locations in the bevel surroundings (to check the metallurgical sanity of the materials).

b) For forgings and casting materials (such as valve bodies, flanges, etc.), ferrite testing shall be performed in at least six (6) different locations (to evaluate the solubilization heat treatment effectiveness). For forgings, the ferrite testing shall be carried out in the locations of greatest fiber elongation (deformation).

Production welds shall be checked for ferrite-austenite ratio (100% ferrite testing) on the base materials, HAZ and weld metal.

Acceptance criteria for ferrite testing shall be as stated in ISO 17781, as follows:

a) 35 % to 60 % in base material

b) 35 % to 65 % in solution heat treated weld metals

c) 30 % to 70 % for welds in the as welded condition, including HAZ.

NOTE 1: Ferrite measuring instruments usually return values in the form of Ferrite Number (FN). Acceptance criteria stated above are in the form of Ferrite Content (% in volume). The reading values shall be converted in order to check the acceptance.

NOTE 2: Ferrite measuring instruments are usually able to convert from FN to Ferrite Content (%). When this conversion is not available the following relations may be used:

a) Ferrite % = 0.70 FN for DSS

b) Ferrite % = 0.65 FN for SDSS

INTERNA

APPENDIX Q – REQUIREMENTS FOR INSPECTION OF WELD OVERLAY AND CLAD RESTORATION

Table Q.1 below presents the additional NDT required for piping with internal weld overlay.

Table Q.1 – Additional NDT for Piping with Weld Overlay and Clad Restoration

Location	NDT	Acceptance Criteria
Weld Overlay and Clad Restoration (from internal surface)	100% VT	See below regarding VT
	100% PT	According to Design Code
	PMI	CRA Specification and I-ET-3010.00-1200-955-P4X-001
	Thickness measurement	Minimum 3 mm
Weld Overlay and Clad Restoration (from external surface)	100% UT	See below regarding UT
Buttered Bevels (after machining)	100% PT	According to Design Code

Regarding VT on the weld overlay, it shall be performed on 100% of weld overlay surface. For non-accessible areas, VT by borescope inspection shall be used. Acceptance criteria for VT shall be as follows:

a) Cracks and other linear imperfections are not permitted.

b) Surface pores are not permitted.

c) Weld overlay surface shall have a smooth appearance and be continuous without interruption. Average peak to trough height between adjacent beads less than 1 mm, except for overlapping areas (start-stop, and so on).

d) No gaps of any width between the weld beads are permitted. Overlapping weld beads with locally increased deposit thickness are allowed provided the minimum cladding thickness requirement is met and that NDT of the weld overlay is satisfactory.

Regarding PT on the weld overlay, it shall be performed on 100% of weld overlay surface. For non-accessible areas, ferroxyl test (as stated below) shall be performed and appraised by borescope inspection to verify that the cladding is continuous and base material is not exposed.

Regarding PMI on the weld overlay and clad restoration, shall be performed on 100% of the overlaid pieces.

INTERNA

Regarding UT examination, the procedure shall comply with ASTM A578, acceptance criteria Level C. If scanning from the weld overlay surface, the use of ISO 17405 standard is recommended, ASTM A578 acceptance criteria Level C applies, as well.

Regarding the thickness measurement, a qualified method and instrument shall be used to assure that minimum thickness was achieved. The qualification of method, such as ultrasonic or magnetic shall be validated by comparison with another reliable method, considering the material specification of CRA as essential variable. The measurements shall be performed on all weld overlay and clad restoring at 0 º, 90 º, 180 º and 270 º, additional checking shall be carried out in ground and concavity regions.

After completion of NDT, the internal clad surfaces shall be washed or otherwise cleaned to ensure that all residual traces of test materials (such as PT developer) are completely removed.

If internally washed with potable water, the pieces shall be dried by air blast using clean, dry air.

If contamination of the weld overlay or clad restoration is suspected, ferroxyl test according to I-ET-3010.00-1200-955-P4X-001 Annex G shall be performed on finished overlay surfaces to check for the presence of free iron.

If contamination is detected, the overlay surface shall be locally pickled and passivated to remove free iron surface contamination before being re-tested and re-examined.

INTERNA