MICROSOFT WORD / V. 365 / I-ET-3000.00-1200-940-P4X-001_J

INDEX OF REVISIONS

REV.	DESCRIPTION AND/OR REVISED SHEETS
0	ORIGINAL ISSUE
A	REVISED PIPING, HVAC, AUTOMATION, STRUCTURE, ELECTRICAL, TELECOMMUNICATION AND 3DMODEL CHAPTERS, WHERE INDICATED
B	REVISED PIPING, MECHANICAL, HVAC, TOPSIDE STRUCTURAL ELEMENTS AND TELECOMMUNICATION CHAPTERS, WHERE INDICATED
C	ITEMS 3, 4, 5.2, 5.2.2, 6, 7, 8.1, 9.3.1.2, 9.3.2.2, 9.3.3.1, 9.3.3.2, 9.3.3.7, 9.3.3.9, 9.3.3.11, 9.3.7, 9.4, 10, 12, 13 REVISED AND ITEM 15 INCLUDED ACCORDING TO CLARIFICATION NOTICE DUE BIDDERS QUESTIONS
D	REVISED ITEM 5.2, INCLUDED ITEM 5.2.3 AND REVISED ITEM 15.4
E	INCLUDED CHAPTER REGARDING SUBSEA (ITEM 15)
F	INCLUDED ITEM 15.6
G	ADJUSTED ITEM 5.2.1.2 AND ITEM 5.2.2
H	ITEMS 5.2.2, 5.2.3, 5.3 AND ITEM 5.4 ADJUSTED
J	INCLUDED ITEM 9.6

	REV. 0	REV. B	REV. C	REV. D	REV. E	REV. F	REV. G	REV. H	REV. J
DATE	SEP/06/18	NOV/11/19	SEP/30/20	FEB/14/22	NOV/04/22	DEC/02/22	JUN/26/23	APR/18/24	MAY/17/24
DESIGN	ESUP	ESUP	ESUP	ESUP	ESUP	ESUP	ESUP	ESUP	ESUP
EXECUTION	ERNANI	ERNANI	CJX4	EIW1	E338	EH7A	EH7A	F0OJ	U4PW
CHECK	ISABELA	IZAO	CJW2	CJW2	EIW1	EIW1	EIW1	CJV5	CJL7
APPROVAL	MEYRELLES	MEYRELLES	U32N	U32N	CQC4	CQC4	CQC4	U32N	CXM6

THE INFORMATION CONTAINED IN THIS DOCUMENT IS PETROBRAS' PROPERTY AND MAY NOT BE USED FOR PURPOSES OTHER THAN THOSE SPECIFICALLY INDICATED HEREIN. THIS FORM IS PART OF PETROBRAS' NI-381-REV.M.

INTERNA \ Qualquer Usuário

ESUP PARTICIPANTS

1. Bernardo Torres de Mattos – Hull Structure
2. Daniela da Câmara Pacheco - Safety
3. Daniela Gomes Schmidt – Mechanical
4. Filipe Castello da Costa Beltrão Diniz – Engineering Design Automation
5. Gabriel Taffarel e Silva – Marine Systems
6. Bruno Ferreira – Process
7. Marcelo Borges Peres - Electrical
8. Paulo Pastore – Topside Structure
9. Pedro Jacinto Vivas Ponte – Piping and Valves
10. Rafael José Gonçalves Pereira – Automation and Instrumentation
11. Robson dos Santos Gonçalves – Telecommunication
12. Renato Ramos Gonzaga - Subsea

INTERNA \ Qualquer Usuário

TABLE OF CONTENTS

1. OBJECTIVE 4
2. ABBREVIATION AND ACRONYMS 5
3. REFERENCE DOCUMENTS 6
4. PROCESS 7
5. PIPING 8
6. SAFETY 12
7. MECHANICAL 13
8. HVAC 14
9. AUTOMATION 20
10. ELECTRICAL 45
11. STRUCTURE 46
11.1. TOPSIDE STRUCTURAL ELEMENTS 46
11.2. HULL STRUCTURAL ELEMENTS 48
11.2.1. LOCATION AT HULL 49
11.2.2. TRANSVERSAL LOCALIZATION 50
11.2.3. LONGITUDINAL LOCALIZATION 50
11.2.4. HULL SIDE 50
11.2.5. SEQUENTIAL NUMBER 50
11.2.6. TYPE OF STRUCTURE 50
11.2.7. THICKNESS 51
11.2.8. PROFILE SECTION 51
11.2.9. SECTION PROPERTIES 51
11.2.10. TYPE OF OUTFITTING 51
11.2.11. EXAMPLES 52
12. MARINE SYSTEMS 53
13. TELECOMMUNICATION 54
14. 3D MODEL (ALL DISCIPLINES) 59
15. SUBSEA 63
16. ANNEX 1 64

INTERNA \ Qualquer Usuário

1. OBJECTIVE

This technical specification establishes the conditions required for the identification of different items and components belonging to a Production Unit in all documents, software, data-banks, and circumstances when these items appea

This document covers the following disciplines: Process. Piping, Mechanical, HVAC, Automation, Electrical, Structure, Marine Systems, Telecommunication and Subsea.

It is expected, as a benefit of the application of this tagging standard, the possibility of better identification of interferences, extraction of consistency reports between P&IDs, D&IDs and 3D model, extraction of reports in the basic design phase and Construction & Assembly, and benefits in the operation phase, since most of the elements will be traceable.

This Standard is not mandatory for the identification of any item introduced in existent units, which shall be identified according to rules established by PETROBRAS, on a case-by-case basis (preferably following previously existing unit rules).

INTERNA \ Qualquer Usuário

2. ABBREVIATION AND ACRONYMS

Tagging – act of identification of an equipment or component

3D model – Database which describes engineering objects defining their position, shape, dimensions and properties

ADV - Automatic Deluge Valve

AFDS - Addressable Fire Detection System

BDV - Blowdown Valve

CAE - Computer Aided Engineering

D&ID - Duct and Instrument Diagram

E&P - Exploration and Production

ESD-2 - Emergency Shutdown level 2

FPSO - Floating Production, Storage and Offloading

HPU - Hydraulic Power Unit

HVAC - Heating, Ventilation and Air Conditioning

IS - Intrinsically Safe

MCT - Multi-Cable-Transit

MPS - Machinery Protection System

JB - Junction Box

P&ID - Piping and Instrument Diagram

PLC - Programmable Logic Controller

PSV - Pressure Safety Valve

SDV - Shutdown Valve

INTERNA \ Qualquer Usuário

3. REFERENCE DOCUMENTS

3.1. Petrobras Documents

DR-ENGP-I-1.1 - Piping Standard and Material for Oil Production and Process Facilities

I-ET-3010.XX-1200-200-P4X-XXX – Piping Specification for Topside and Piping Specification for Hull [1]

I-ET-3010.00-1400-140-P4X-001 – Structural Plates and Profiles Catalogue

I-ET-3010.00-5140-700-P4X-001 - Specification for Electrical Design for Offshore Units

EXHIBIT III- APPENDIX 1 - Structure of The Buyer Code Number System

3.2. Other Documents

ISA-5.1 2009 – Instrumentation Symbols and Identification

API RP 14C – Recommended Practice for Analysis, Design, Installation and Testing of Basic Surface Safety Systems for Offshore Production Platforms

[1] Technical Specification issued for a specific Project for Topside and for Hull

INTERNA \ Qualquer Usuário

4. PROCESS

Identification TAGs of Process equipment shall be defined according to requirements of Annex 1 and considering alternative of “System number/area of activity” described in EXHIBIT III.

This Standard establishes the conditions required for the identification of equipment belonging to industrial facilities of PETROBRAS.

This Standard does not apply to measurement and control instruments nor to piping items. For these items, refer to Automation and Piping sections.

In all documents pertaining to an industrial equipment or in documents where reference is made to an industrial equipment, the industrial equipment shall be identified according to Annex 1.

INTERNA \ Qualquer Usuário

5. PIPING

5.1. Piping Tagging:

Piping tagging shall be according to the last version of the piping specification document issued during basic design phase: Piping Specification for Topside and Piping Specification for Hull.

5.2. Piping fittings Tagging:

Piping fittings are:
- Valves
- Special Items
- Chemical Injection Points (CIPs)

Piping fittings Tagging shall be according to the following procedure:

5.2.1. Valves:

Two different groups of valves shall be used for tagging named: instrumented valves and non-instrumented valves

5.2.1.1. Instrumented Valves
For more information see chapter 9-AUTOMATION

5.2.1.2. Non-instrumented Valves
For non-instrumented valves tagging shall be according to the following procedure.

(A)(-)(B)(C)

Where:

(A) = "VALV"

(-) =hyphen

(B) = area/system (according to EXHIBIT III) and

(C) = sequential code (four numbers)

Example of non-instrumented valve tag: **VALV–12540001**

VALV: Not instrumented valve

1254: CO_2 gas injection system

0001: Sequential Numbering

5.2.2. Special Items

Special items as Spectacle blinds, Spacers, Paddle Blanks (Spades), Restriction Orifice, Orifice Plate, Quick connection, Conical filters, T filters, Y filters, Spools, Expansion Joints, Strainers, Connections, Hose and other special Items (piping special items not listed previously) shall be tagged according the following procedure:

(A)(-)(B)(C)

Where:

(A) = ESP;

(-)= hyphen

(B)= area/system (according to EXHIBIT III) and

(C) = sequential code (four numbers)

Example of special item tag: **ESP–12540001**

ESP: Special Item

1254: CO_2 gas injection system

0001: Sequential Numbering.

5.2.3. Chemical Injection Points (CIPs)

CIPs shall be tagged according to the following procedure:

(A)(-)(B)(C)

Where:

(A) = CIP

(-) = hyphen

(B) = area/system (according to EXHIBIT III) and

(C) = sequential code (four numbers)

5.3. Tagging procedure for topsides pipe supports

For topsides pipe supports, tagging shall be according to the following procedure:

(A)(-)(B)(-)(C)

Where:

(A) = Support type (abbreviation); according to **Table 5-1.**

(-) = hyphen

(B) = Support Module Location (abbreviation);

(-) = hyphen

(C) = Sequential code (four digits)

Example of topside pipe support: **SP–M07-0001**

SP: Standard Support

M07: FPSO Module 07

0001: Sequential Numbering.

*NOTES:

For FPSO modules (including pipe-rack), the abbreviation shall be composed by the letter M and two sequential digits.

INTERNA \ Qualquer Usuário

Table 5-1- Support type abbreviation

Support Type	Abbreviation
Standard Support	SP
Special Support	SE
Spring Support	SM

5.4. Tagging procedure for hull pipe support

For hull pipe supports, tagging shall be according to the following procedure:

(A)(-)(B)(-)(C)(-)(D)(-)(E)

Where:

(A) = Support type (abbreviation); according to **Table 5-1.**

(-) = hyphen

(B) = Hull Region (abbreviation); according to **Table 5-2** and **Table 5-3**

(-) = hyphen

(C) = Frame number (three digits), according to Hull design

(-) = hyphen

(D) = Hull side;

(-) = hyphen

(E) = Sequential code (four digits)

Table 5-2 – Hull Region Abbreviation

Hull Region	Abbreviation
Poop Deck and Aft Region	AR
Accomodation	AC
Main Deck	MD
Fore Castle Deck and Fwd Region	FR
Engine Room	ER
Pump Room / Cofferdam	PR
Cargo Area	CA
Fwd Peak Tank	FP

INTERNA \ Qualquer Usuário

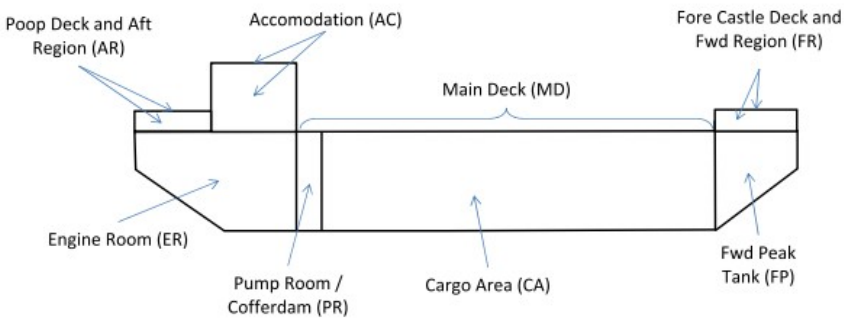

Figure 5.1 - Hull Regions

Example of hull pipe support: **SP–MD-125-PS-0001**

SP: Standard Support

MD: FPSO Main Deck

125: Frame number

PS: Portside

0001: Sequential (four numbers).

Table 5-3 – Hull Side

Hull Side	Abbreviation
Portside	PS
Starboard	SB

6. SAFETY

Identification TAGs of Process equipment shall be defined according to requirements of Annex 1 and considering alternative of “System number/area of activity” described in EXHIBIT III.

This Standard establishes the conditions required for the identification of equipment belonging to industrial facilities of PETROBRAS.

This Standard does not apply to measurement and control instruments nor to piping items. For these items, refer to Automation and Piping sections.

In all documents pertaining to an industrial equipment or in documents where reference is made to an industrial equipment, the industrial equipment shall be identified according to Annex 1.

INTERNA \ Qualquer Usuário

7. MECHANICAL

Identification TAGs of Mechanical equipment shall be defined according to requirements of Annex 1 and considering alternative of “System number/area of activity” described in EXHIBIT III.

This Standard establishes the conditions required for the identification of equipment belonging to industrial facilities of PETROBRAS.

This Standard does not apply to measurement and control instruments nor to piping items. For these items, refer to Automation and Piping sections.

In all documents pertaining to an industrial equipment or in documents where reference is made to an industrial equipment, the industrial equipment shall be identified according to Annex 1.

For monorails tagging, refer to 11.1 TOPSIDE STRUCTURAL ELEMENTS chapter.

INTERNA \ Qualquer Usuário

8. HVAC

8.1. Equipment

Identification TAGs of HVAC equipment shall be defined according to requirements of Annex 1 and considering alternative of "System number/area of activity" described in EXHIBIT III.

All observations about process equipment are also valid.

8.2. Ducts

All ducts shall be individually identified by an alphanumeric combination of 5 (five) elements

A-B-C-D-E where:

A - Service identification;

B - Served Equipment TAG sequential;

C - Duct System - Sequential identification;

D - Duct Run - Sequential identification (only for 3D model);

E – Part number – Sequential identification (only for 3D model);

As detailed in Sections 8.2.1 to 8.2.5.

8.2.1. Service Identification

AC: Air Conditioning supply;

RTN: Air Conditioning machines return;

AE: Outside air intake for air conditioning machines;

INS: Fan supply;

EXT: Fan exhaust;

ENT: Duct branch, for air intake, not connected to HVAC equipment;

SAI: Duct branch, for exhaust, not connected to HVAC equipment

8.2.2. Sequential identification of the equipment (or redundant equipment group) served by the system. When dealing with air intake or exhaust duct branches, not connected to any HVAC equipment, this item shall be fulfilled with '000'.

8.2.3. Sequential: alphanumeric combination of 3 digits, as defined in item 8.3.

8.2.4. Sequential: alphanumeric combination of 3 digits, as defined in item 8.4.

8.2.5. Sequential: alphanumeric combination of 3 digits, as defined in item 8.4.

INTERNA \ Qualquer Usuário

Examples:

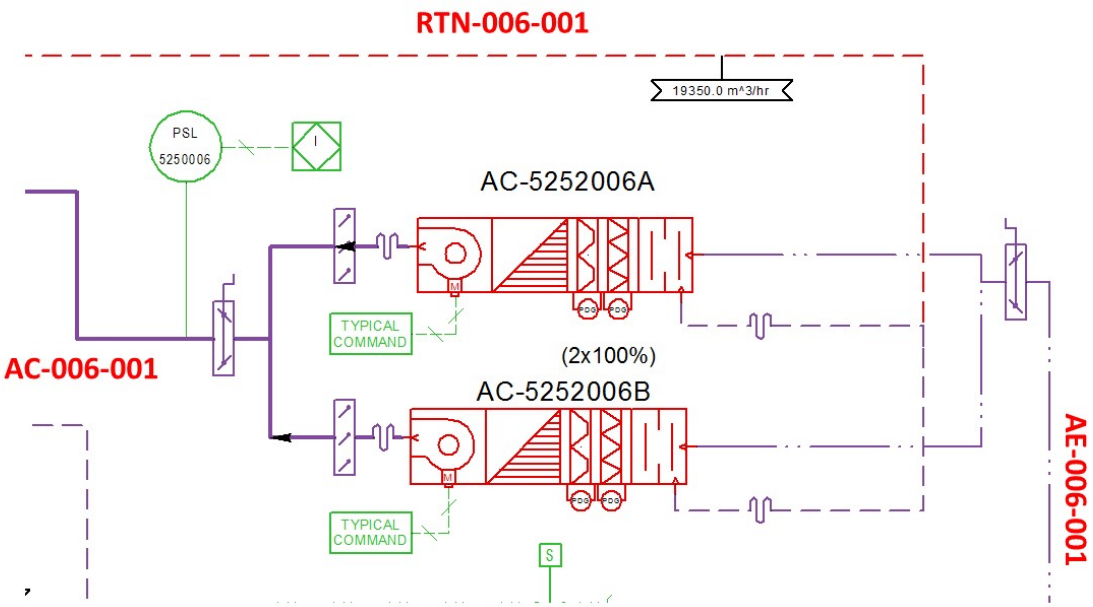
RTN-006-001
19350.0 m^3/hr
PSL
5250006
I
AC-5252006A
TYPICAL COMMAND
(2x100%)
AC-5252006B
TYPICAL COMMAND
AC-006-001
AE-006-001
S

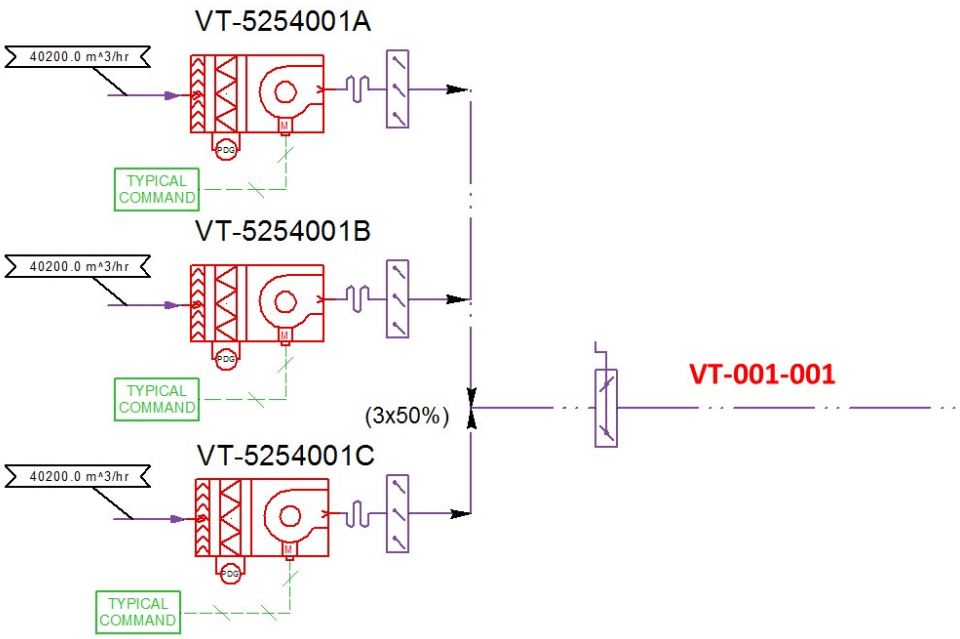
VT-5254001A
40200.0 m^3/hr
TYPICAL COMMAND
VT-5254001B
40200.0 m^3/hr
TYPICAL COMMAND
(3x50%)
VT-5254001C
40200.0 m^3/hr
TYPICAL COMMAND
VT-001-001

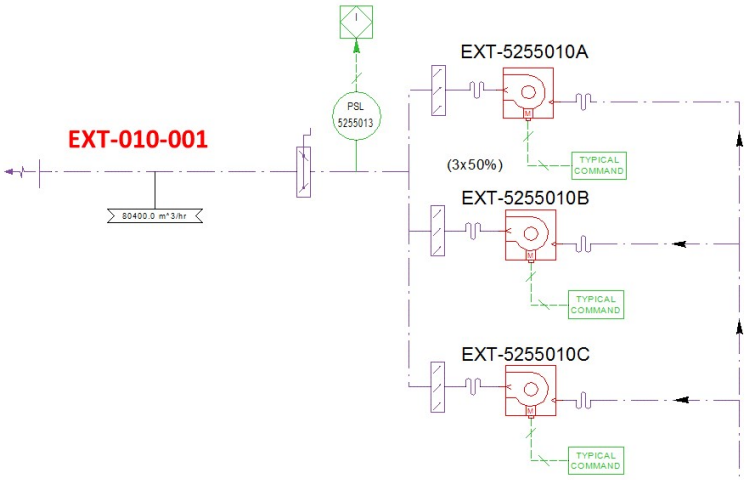
EXT-010-001
80400.0 m^3/hr
PSL
5255013
EXT-5255010A
(3x50%)
TYPICAL COMMAND
EXT-5255010B
TYPICAL COMMAND
EXT-5255010C
TYPICAL COMMAND

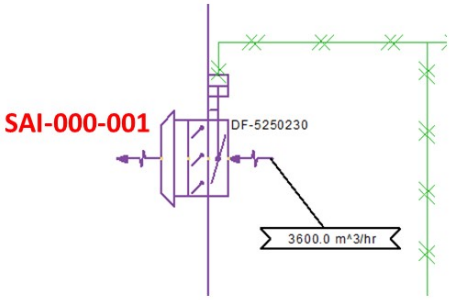
SAI-000-001
DF-5250230
3600.0 m^3/hr

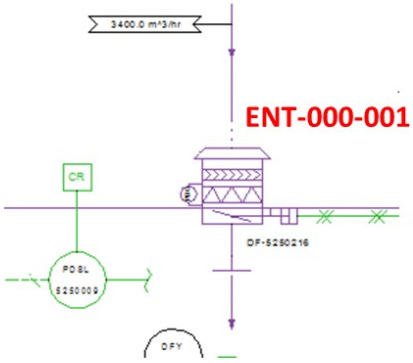
3400.0 m^3/hr
ENT-000-001
CR
DF-5250216
PDSL
5250009
DFY

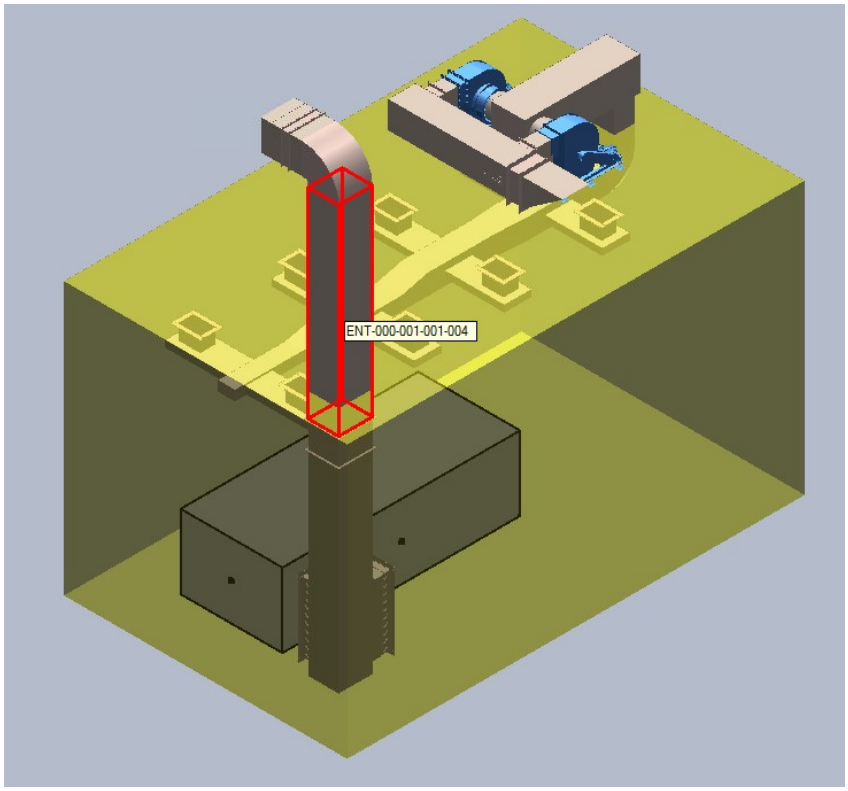
ENT-000-001-001-004

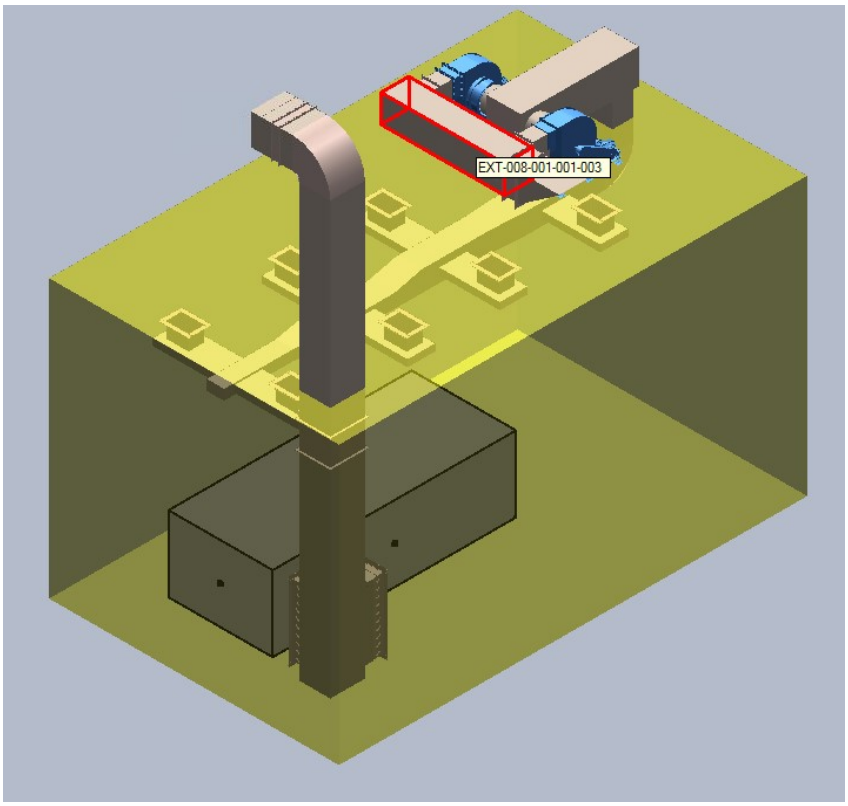
EXT-008-001-001-003

8.3. Rules for Sequential definition (D&IDs)

8.3.1. For ducts connected to supply fans

- sequential 001 shall start at fan discharge
- For redundant equipment, sequential 001 shall be used for both “A” equipment and “B” equipment initial duct
- Sequential number 001 shall be the same for one duct line chosen that will finish in an ambient
- Every branch from the 001 duct system shall have a new sequential number that will represent also a duct line chosen that will finish in an ambient
- And so the rule will be applied to all branches
- After defining sequential numbers for discharge ducts, the same procedure shall be used for fan suction branches, respecting the last sequential used for supply fans

8.3.2. For ducts connected to exhaust fans

- sequential 001 shall start at fan suction
- For redundant equipment, sequential 001 shall be used for both “A” equipment and “B” equipment initial duct
- Sequential number 001 shall be the same for one duct line chosen that will finish in an ambient
- Every branch from the 001 duct system shall have a new sequential number that will represent also a duct line chosen that will finish in an ambient
- And so the rule will be applied to all branches
- After defining sequential numbers for suction ducts, the same procedure shall be used for fan discharge branches, respecting the last sequential used for supply fans

8.3.3. For ducts connected to air condition supply system

- sequential 001 shall start at machine discharge
- For redundant equipment, sequential 001 shall be used for both “A” equipment and “B” equipment initial duct
- Sequential number 001 shall be the same for one duct line chosen that will finish in an ambient
- Every branch from the 001 duct system shall have a new sequential number that will represent also a duct line chosen that will finish in an ambient
- And so the rule will be applied to all branches

INTERNA \ Qualquer Usuário

8.3.4. For ducts connected to air condition return system

- sequential 001 shall start at machine mix section
- For redundant equipment, sequential 001 shall be used for both “A” equipment and “B” equipment initial duct
- Sequential number 001 shall be the same for one duct line chosen that will finish in an ambient
- Every branch from the 001 duct system shall have a new sequential number that will represent also a duct line chosen that will finish in an ambient
- And so the rule will be applied to all branches

8.3.5. For ducts connected to air condition outside air system

- sequential 001 shall start at machine mix section (when available) or air intake
- For redundant equipment, sequential 001 shall be used for both “A” equipment and “B” equipment initial duct
- Sequential number 001 shall be the same for one duct line chosen that will finish at air intake

8.3.6. For duct branch, from air intake, not connected to HVAC equipment

- sequential 001 shall start at air intake outside ambient

8.3.7. For duct branch, from exhaust, not connected to HVAC equipment

- sequential 001 shall start at air intake inside ambient

8.4. Rules for Sequential definition (3D Model)

Any duct system defined in D&IDs may be splited in as many as necessary duct runs which will have a sequential number as defined in item 8.2.

Sequential number shall be changed for different spools (branches between flanges).

Sequential number shall be changed after direction change fittings.

Sequential number shall be changed after branch fittings.

Sequential numbers for transition fittings shall follow the same rules of the ducts where they are assembled.

INTERNA \ Qualquer Usuário

9. AUTOMATION

9.1. GENERAL

The purpose of this chapter is to establish the systematic that shall be adopted for the identification (Tagging, TAG) of all instrumentation items.

Prior to describing the TAGs, this chapter contains a section describing the existing and the adopted sequential tagging logic.

All TAGs shall be unique, i.e., the same TAG shall not be used to describe different equipment, instruments, mechanical components, and so on.

Package-units' instruments shall also abide to the rules of this document.

9.2. Sequential numbering logics

The sequential number is a set of 3 digits present in every loop and every instrument TAG. There are 2 possible ways to choose these digits, described in ISA 5.1 R1992. They are presented below.

9.2.1. Serial numbering

This logic states that the sequential number shall never be the same for every loop, regardless of the measured variable (first letter of the prefix).

Example:

Table 9-1 - Serial numbering logic

LOOP	Loop Instruments
T- 1223001	TIT-1223001, TV-1223001, TIC-1223001, TSH-1223001
P-1223002A	PIT-1223002A, PSH-1223002A, PSHH-1223002A
P-1223002B	PIT-1223002B, PSH-1223002B, PSHH-1223002B
L-1223003	LIT-1223003 LSH-1223003
T- 1223004	TIT-1223004, TV-1223004, TIC-1223004,TSH-1223004

Note that:

- the sequential numbers do not repeat themselves (except when used in combination with other letters)
  - In other words, when the sequential number is used with a certain measured variable, it may not be used again with a different measured variable.
  - In the example above: Once the loop T-1223001 has been created with the TIT-1223001 and other instruments in it, then the number 1223001 shall not be used for other variables (pressure, flow, and so on). That's why the first pressure loop has a sequential number of 1223002.
- Physical and virtual instruments shall have the same sequential number as the loop to which they belong.

INTERNA \ Qualquer Usuário

9.2.2. Parallel numbering

This logic allows the use of the same sequential number for different measured variables (first letter of the Prefix).

Example:

Table 9-2 - Parallel tagging logic

LOOP	Loop Instruments
T- 1223001	TIT-1223001, TV-1223001, TIC-1223001,TSH 1223001
P-1223001A	PIT-1223001A PSH-1223001A, PSHH-1223001A
P-1223001B	PIT-1223001B PSH-1223001B, PSHH-1223001B
L-1223001	LIT-1223001, LSH-1223001
T- 1223002	TIT-1223002, TV-1223002, TIC-1223002,TSH 1223002

Note that the sequential number repeats itself for different variables.

9.2.3. PETROBRAS sequential numbering

PETROBRAS E&P segment adopts parallel tagging as its standard, with a few exceptions that use serial numbering, described below.

- Valves with Limit switches or position indicators

  - Valves with limit switches and position indicators (generally SDV, BDV, ADV, XV, HV, AMV, SCSSV, other subsea valves, ..) shall have serial numbering, to ensure that their accessories shall never have the same TAG. This is performed by setting the loop prefix “XV-” to all of these valves.

- Flow Measurement Loop or Multivariable Loop

  - In case a loop contains more than one measured variable, then the loop’s sequential number shall not be repeated for the variables involved. Example 9.3.3.3 clarifies this rule.

PETROBRAS E&P segment usually reserves the following Sequential numbers depending on the physical location of the instruments for production units:

- 001-499 → Topsides instruments and equipment
- 500-799 → Hull instruments and equipment
- 800-999 → Package-units and CLLI instruments and equipment

9.3. Instrumentation Electronic Components

9.3.1. Process Loops

9.3.1.1. General

All loops shall be represented by their complete TAG in all drawings, Descriptive Memorials, Logic Diagrams, Technical Specifications, Data Sheets or in any other documents in which they are mentioned.

9.3.1.2. Loop TAG formation

AAA–BBBBCCCD

- 1st Group (AAA): Loop Measured Variable Designation – Mandatory
  - A set of 1-3 characters as per section 9.3.1.3.
  - In case an instrument is not covered by Table 9-3 or the first 2 columns of Table 9-4 (read in conjunction with ISA-5.1 2009 Table 1), the Loop's TAG must be agreed with PETROBRAS.
- 2nd Group (BBBB): Process System, Area or Unit Designation - Mandatory
  - A set of 4 digits representing the process system (or, in some cases, the area or unit) to which the instrument belongs.
  - This group shall follow EXHIBIT III codes and requirements.
  - The use of HOLD in Process System, Area or Unit designation is not allowed, i.e., the Process System, Area or Unit of an instrument must be defined in all project stages.
- 3rd Group (CCC): Sequential Designation - Mandatory
  - A set of 3 numbers indicating the sequential order of the instrument type. This numbering shall be consistent inside the process system, area or unit. See section 9.2.3 for the PETROBRAS sequential numbering logic for instrument tagging.

    By "consistent", it is meant that instruments that belong to the same loop shall have the same sequential number.
  - If necessary, the use of HLD (to indicate HOLD) is allowed to indicate that the sequential is not yet defined or that it will be defined later on another project phase.
  - No HOLD indications shall remain after the conclusion of the Detailing Project phase.
  - Process and safety loops that monitor the same variable shall have the same sequential number.
- 4th Group (D): Alphabetic code suffix - Optional
  - This character is used to distinguish identical loops that perform the same function in similar systems, similarly to what is done in Annex 1. See example 9.3.3.2 for clarification.

    Voting instruments does not use the 4th group for tagging.

9.3.1.3. Reference tables for the Loop Measured Variables Designation (1st group)

The first column of Table 9-4 (adapted from ISA-5.1 2009 Table 1) shall be used for the vast majority of regular loops.

However, PETROBRAS E&P segment complements ISA notation by using a set of special combination of characters to discern loops containing subsea valves and to distinguish loops containing on-off valves according to their function. These set of characters were based on API RP 14C and are shown on Table 9-3.

INTERNA \ Qualquer Usuário

Table 9-3 - Special Loop Measured Variable Designation (1st group) for Loops.

Prefix	Loop Type
XV	Shutdown Valve Loops
XV	Blowdown Valve Loops
XV	Deluge Valve Loops
XV	Annular Master Valve Loops
XV	Auxiliary Wing Valve Loops
XV	Cross-Over Valve Loops
XV	Surface Controlled Subsurface Safety Valve Loops
XV	Piggable Cross-Over Valve Loops
PDG	Permanent Downhole Gauge Loops
XV	Production Master Valve Loops
XV	Production Wing Valve Loops
TPT	Submarine Pressure and Temperature Transmitter Loops
XV	On-Off Valve Loops
XV	Limit switch (ZSL/ZSH) of valves Loops
XV	Choke Valve

SDVs, BDVs, XVs and any other valves that possess limit switches shall pertain to loops with a Loop Prefix of XV. This is meant to allow the limit switches to have the same sequential number as the valves and to ensure that these accessories shall never have the same TAG in different valves (i.e., valves with limit switches shall have serial numbering, as per 9.2.1).

Variable modifiers also integrate the loop. Example: differential pressure PDIT-1223001's loop shall be PD-1223001.

9.3.2. Process Instruments

9.3.2.1. General

This section covers process instruments. Fire and Gas Detection instruments are covered in section 9.3.4.

Process instruments shall be represented by their complete TAG in all drawings, Descriptive Memorials, Logical Diagrams, Technical Specifications, Data Sheets or in any other documents in which they are mentioned.

9.3.2.2. TAG formation

The instrument TAG is an alphanumeric code composed of six (6) Groups disposed as below:

AAAAAA–BBBBCCCD–FE

- 1st Group (AAAAAA): Instrument Measured Variable Designation - Mandatory
  - A set of 2-6 characters as per section.
  - In case an instrument is not covered by Table 9-4 (read in conjunction with ISA-5.1 2009 table 1) and Table 9-5, the instrument's TAG must be agreed with PETROBRAS.

- 2nd Group (BBBB): Process system, Area or Unit Designation - Mandatory
  - Same as the Loops TAG. See section 9.3.1.2.
- 3rd Group (CCC): Sequential Designation - Mandatory
  - Same as the Loops Sequential Designation. See section 9.3.1.2.
- 4th Group (D): Alphabetic code suffix - Optional
  - Same as the Loops Alphabetic code suffix. See section 9.3.1.2.
  - Voting does not use the 4th group for tagging. See the 5th group for voting arrangements.
  - This Group may also be used to distinguish identical instruments that do not belong to any loop but perform the same function in similar systems, similarly to Annex 1. For example, manometers or PSVs do not belong to any loop but may have tags such as PSV-1223001A.
- 5th Group (E): Numeric code suffix - Optional
  - A digit is used to discern, in terms of capacity/range extension or voting, the TAGs of instruments that perform the same function in the same process system, area or unit.

    By voting it is meant that all involved instruments are operating and their output is compared by the logic solver in order to decide on the final control action.
- 6th Group (F): Extra character - Optional
  - An extra digit or character is used to indicate further redundancies or subdivisions. For an example, see Section 9.3.3.8.

When the 5th and 6th groups are not used (FE), the last hyphen must be suppressed.

ISA-5.1 2009 Table 1 shall be read in conjunction with Table 9-4 (that shows the modifications used by Petrobras in ISA-5.1 2009 table 1) in order to TAG the vast majority of regular instruments. The letters which are not mentioned in Table 9-4 remain the same as in ISA-5.1 2009 Table 1.

Table 9-4 - PETROBRAS changes to ISA-5.1 2009 table 1. Differences from ISA-5.1 2009 are either underlined (PETROBRAS addition) or crossed out (PETROBRAS removal).

	First Letter		Succeeding letters		
	Column 1	**Column 2**	**Column 3**	**Column 4**	**Column 5**
	Measured / Initiating Variable	**Variable Modifier**	**Readout / Passive Function**	**Output / Active Function**	**Function Modifier**
D	Density, Damper (fire and gas, see column 4)	Difference, Differential		-	Deviation
F	Flow, Flow Rate	Ratio Fire Damper		-	-
G		Gas Damper	Glass, Gauge, Viewing Device	-	-
H	Hand				High, (Open Valve)
L	Level		Light		Low, (Closed Valve)
S	Speed, Frequency	Self-Actuated Safety		Switch	Stop
M	Moisture				Middle, intermediate
V	Vibration, mechanical Analysis			Valve, Damper, Louver	
X	Corrosion, unclassified	X-axis	Accessory devices, unclassified	Unclassified	Unclassified
Z	Position, Dimension	Z-axis, Safety Instrumented System		Driver, actuator, Unclassified final control element	

Some clarifications regarding ISA-5.1 2009 Table 1 and Table 9-4:

- Column 4 letter “I” x letter “G”:
  - Letter “I” shall be used when the instrument has a local electronic display or for the display of the variable in the Supervisory system.
  - Letter “G” shall be used if the instrument is entirely mechanical (ex: thermometers, level gauges, manometers)

PETROBRAS E&P segment complements ISA notation by using a set of special combination of characters to discern Subsea valves and to distinguish some valves according to their function. Many of these set of characters were based on API RP 14C and are shown on Table 9-5.

Table 9-5 - Special Instrument Measured Variable Designation (1st group) for subsea valves and to some valves related to safety.

Prefix	Instrument Type
SDV / SDY	Shutdown Valve (V) and its solenoid (Y)
BDV / BDY	Blowdown Valve (V) and its solenoid (Y)
ADV / ADY	Automatic Deluge Valve (V) and its solenoid (Y)
AMV / AMY	Annular Master Valve (V) and its solenoid (Y)
AWV / AWY	Auxiliary Wing Valve (V) and its solenoid (Y)
COV / COY	Cross-Over Valve (V) and its solenoid (Y)
SCSSV/SCSSY	Surface Controlled Subsurface Safety Valve (V) and its solenoid (Y)
PCOV / PCOY	Piggable Cross-Over Valve (V) and its solenoid (Y)
PDG	Permanent Downhole Gauge (Same notation as Differential pressure gauge, shall be distinguished by context)
PMV / PMY	Production Master Valve (V) and its solenoid (Y)
PWV / PWY	Production Wing Valve (V) and its solenoid (Y)
TPT	Submarine Pressure and Temperature Transmitter
XV / XY	On-Off Valve (V) and its solenoid (Y)
HV / HYL / HYH	Choke valve (V) and its solenoids (YL / YH)

9.3.3. Examples of Process Loops and Instruments

9.3.3.1. Process loops and instruments

Consider the existence of a series of loops in the Oil processing system (1223 as EXHIBIT III), composed of the following instruments and valves:

- Loop 1:
  - A pressure controlled valve;
  - A pressure indicator and controller;
  - A pressure indicator and transmitter;
- Loop 2:
  - A Level indicator and transmitter;
  - A level indicator and controller;
  - A level controlled valve.

Consider other instruments that do not belong to any of the above loops:

- A pressure manometer measuring the same pressure of loop 1;
- A pressure indicator and transmitter measuring a different point;
- A temperature indicator and transmitter;
- A pressure manometer measuring a third different point;

- A differential pressure indicator and transmitter measuring a different point;

Assuming the sequential numbers have not been used by other loops, the TAGs shall be:

- Loop P-1223001, containing, respectively:
  - PV-1223001;
  - PIC-1223001;
  - PIT-1223001;
  - PI-1223001 (virtual instrument: Supervisory indication of PIT-1223001).
- Loop L-1223001, containing, respectively:
  - LIT-1223001;
  - LI-1223001 (virtual instrument: Supervisory indication of LIT-1223001);
  - LIC-1223001;
  - LV-1223001.
- Loop P-1223002:
  - PIT-1223002;
  - PI-1223002 (virtual instrument: Supervisory indication of PIT-1223002).
- Loop T-1223001:
  - TIT-1223001;
  - TI-1223001 (virtual instrument: Supervisory indication of TIT-1223001).

Loop PD-1223001:

- PDIT-1223001;
  - PDI-1223001 (virtual instrument: Supervisory indication of PDIT-1223001).
- No Loop (entirely mechanical instruments):
  - PG-1223003;
  - PG-1223004.

Note that sequential designation is kept the same for all loop elements.

9.3.3.2. Loops and instruments of similar systems

Suppose pumps B-1223002A/C are arranged in a redundant configuration and that there are three pressure instruments, each one measuring the discharge pressure of each pump.

Loops and instruments TAGs are:

- For pump B-1223002A → Loop P-1223003A, containing PIT-1223003A
- For pump B-1223002B → Loop P-1223003B, containing PIT-1223003B
- For pump B-1223002C → Loop P-1223003C, containing PIT-1223003C

Another example: assume there is a Thermometer measuring the temperature of each line associated with the Well Pig Launchers, in the Gas-Lift system (1244, as per EXHIBIT III).

Well Pig Launchers are not redundant, but they perform similar functions in process system 1244. Well Pig Launchers are tagged LP-1244001A, LP-1244001B, LP-1244001W. Therefore, the associated thermometers shall have tags TG-1244004A, TG-1244004B, TG-1244004W, following their respective Well Pig Launcher suffix.

Thermometers have no loop, if they are purely mechanical.

9.3.3.3. Flow metering Loop

Suppose there is a flow metering point in the oil treatment system, which is composed of an orifice plate, a flow indicator and transmitter, with its associated pressure and temperature indicators and transmitters. Besides, assume there is a flow computer associated to this metering point.

Finally, assume there are 2 other totally unrelated sensors in the same system: a Level indicator and transmitter; and a Pressure indicator and transmitter.

The Loops are:

- F-1223001 → Flow metering Loop. Composed of:
  - FE-1223001
  - FIT-1223001
  - PIT-1223001
  - TIT-1223001
  - FQIT-1223001
- P-1223002 → Unrelated Pressure Loop. Composed of:
  - PIT-1223002
- L-1223001 → Unrelated Level Loop. Composed of:
  - LIT-1223001

Note that the flow metering loop has prohibited the use of Loop P-1223001, because loop F-1223001 already contains a PIT-1223001.

9.3.3.4. Split range valves

Suppose that the water outlet from SG-1223001 has a too wide range of operation, requiring two valves operating in a split range fashion in order to control the water level inside the vessel.

The TAGs are:

- Loop: L-1223001, containing, among others:
  - LV-1223001-1;
  - LV-1223001-2.

9.3.3.5. Range extension

Assume the flow measurement of the LP Fuel Gas Distribution Header is made by a senior orifice fitting associated with two flow indicators and transmitters using differential pressure. The two transmitters are required to extend the measurement range.

The Senior Orifice TAG shall then be FE-5135017 and the associated transmitters shall have TAGs FIT-5135017-1 and FIT-5135017-2. Each orifice plate shall be tagged FE-5135017-1, FE-5135017-2, FE-5135017-3, and so on.

9.3.3.6. Valve with several solenoids

Consider an ON-OFF valve that has 2 solenoids: one receives commands from Process Shutdown PLC and the other from the Fire and Gas PLC.

The TAGs are:

- Loop: XV-1233001
  - XV-1233001
  - XY-1233001-1
  - XY-1233001-2
  - ZSL-1233001
  - ZSH-1233001

9.3.3.7. PSVs

Consider there are three PSVs protecting the downstream side of the Hydraulic Power Unit pumps (5139 system) and that they are arranged in the following fashion:

- 2 PSVs are required to be in operation for the protection of the system;
- 1 PSV is spare.

The 3 PSVs are arranged in a redundant configuration. The 3 PSVs shall be tagged:

- PSV-5139001A → First PSV in operation;
- PSV-5139001B → Second PSV in operation;

- PSV-5139001C → Spare PSV.

9.3.3.8. Complex PSV example

The objective of this example is to show the allowable extrapolation of the rules presented in this specification.

Assume there are 2 CO_2 compressors, tagged C-UC-1254001A and C-UC-1251001B. Assume the lines in which these compressors are installed are to be protected with PSVs and that 2 operating PSVs and 1 spare are needed per Compressor.

The PSVs tags shall be:

- For compressor C-UC-1254001A
  - PSV-1254001A-A
    - First PSV of compressor C-UC-1254001A
  - PSV-1254001A-B
    - Second PSV of compressor C-UC-1254001A
  - PSV-1254001A-C
    - Third (Spare) PSV of compressor C-UC-1254001A
- For compressor C-UC-1254001B
  - PSV-1254001B-A
  - PSV-1254001B-B
  - PSV-1254001B-C

9.3.3.9. Shutdown valve

Suppose there is a Shutdown valve in main gas compression (system 1231 as per EXHIBIT III), which has 2 limit switches monitoring its open state and its closed state. This valve is closed by an ESD-2 signal.

Besides, assume nearby this valve, is a (safety related) pressure monitoring instrument that generates a HH alarm and a consequent ESD-2.

The TAGs involved shall be:

- SDV-1231001 → First Shutdown valve of system 1231
- SDY-1231001 → Solenoid of SDV-1231001
- ZSL-1231001 → Closure limit switch of SDV-1231001
- ZSH-1231001 → Open limit switch of SDV-1231001
- PIT-1231002 → Safety-related Pressure Indicator and transmitter
- PSHH-1231002 → Safety-related Very High Pressure Switch (comparator)

INTERNA \ Qualquer Usuário

- PAHH-1231002 → Safety-related Very High Pressure Alarm

9.3.3.10. Voting example

Assume that three Pressure indicators and transmitters have been arranged in a 2oo3 voting system in order to generate an Emergency shutdown (ESD) signal. This signal, among other actions, closes a Shutdown valve, installed with 2 solenoids arranged in a 1oo2 configuration.

Then the instruments and valve involved shall be tagged:

- Loop P-1223001 → Generates ESD signal
  - PIT-1223001-1
  - PIT-1223001-2
  - PIT-1223001-3
  - PSHH-1223001
  - PAHH-1223001
- Loop XV-1223001 → Receives ESD signal
  - SDV-1223001
  - SDY-1223001-1
  - SDY-1223001-2
  - ZSL-1223001
  - ZSH-1223001

9.3.3.11. HVAC example

Consider there is a room in module 17 with a fire damper and a gas damper, which are actuated by solenoids whose actuation logic comes from the Cause and Effect matrix of the unit.

The TAGs are:

- Loop DF-5250101:
  - DF-5250101 → Fire damper (as per Annex 1).
  - DFY-5250101 → Solenoid of fire damper DF-5250101.
- Loop DG-5250001:
  - DG-5250001 → Gas tight damper (as per Annex 1).
  - DGY-5250001 → Solenoid of gas tight damper DG-5250001.

INTERNA \ Qualquer Usuário

9.3.4. Fire and Gas Detection Loops

9.3.4.1. General

Fire and Gas detection loops shall be represented by their complete TAG in all drawings, descriptive memorials, Logical Diagrams, Technical Specifications, Data sheets or in any other documents in which they are mentioned.

This section applies only to instruments which are not connected to the Addressable Fire Detection System (AFDS). AFDS loops go through different modules and zones. AFDS loops are simply represented by a single letter (A to Z), which is already indicated in their instruments' TAG.

9.3.4.2. Loop TAG formation

Fire and Gas detectors TAG is an alphanumeric code composed of five (5) Groups disposed as below:

TTT–GGG–MMM–ZZZ–LXXX

Where:

- 1st Group (TTT): Detector Designation - Mandatory
  - A set of 1-3 characters defining the type of sensor as per Table 9-6.
  - In case a detector is not covered by the tables, the instrument's TAG must be agreed with PETROBRAS.

Table 9-6 - Detector Designation for non-addressable Fire and Gas Loops.

Prefix	Fire and Gas Loop Type
A	Gas detector
U	Flame/Fire detector
Y	Smoke detector
H	Manual alarm pushbutton
T	Heat (Thermo-velocimetric) detector

- 2nd Group (-GGG): Gas Type Designation – Mandatory only for AST
  - A set of 2-3 characters defining the type of gas measured by the instrument, as per Table 9-7.
  - This field is Mandatory only for gas detectors (AST). For other detectors, this field does not exist.

Table 9-7 - Allowable gas type designations.

Gas types	Fire and Gas instrument Type
CH4	Hydrocarbon gas detector (CH4 or others)
H2S	Hydrogen sulfide detector
H2	Hydrogen detector
CO2	Carbonic gas detector

INTERNA \ Qualquer Usuário

- 3rd Group (MMM): Module or Hull section – Mandatory

A set of 3 characters or digits indicating the module or the hull section where the instrument is installed.

In case the instrument is located in the Topsides, this field shall be filled with M01, M02, … with the module where the instrument is installed.

In case the instrument is located in the Hull, this field shall be filled with the 2 character code of Table 5-2 followed by a number representing the distance to the main deck (main deck number is 0). Examples:

  - AC2: second level of the accommodation
  - MD0: Main deck
  - ER4: Fourth level of the Engine Room

- 4th group (ZZZ): Zone – Mandatory

  - A set of 3 digits indicating the Zone (for gas sensors) in which the instrument is installed.
  - Zone code is still used for triad sensors.

- 5th group (L): Addressable Loop – Mandatory for Addressable instruments

  - A character representing the Loop in which Addressable fire and gas instruments are installed.
  - Mandatory for Addressable instruments. This field does not exist for instruments connected directly to the Fire and Gas PLC.
  - This field shall be filled with H (for HOLD) during Basic Design engineering phase, because only during Detailed Engineering Phase the quantities and correct number of instruments per loop shall be known. At the end of the Detailed Engineering Phase, no holds shall be present (therefore letter H shall no longer be used).

- 6th group (XXX): Sequential numbering – mandatory

  - A set of 3 digits indicating number of the Loop.
  - For addressable instruments, this field shall be equal to the instrument's sequential number, because the loop is already represented with the 5th group (addressable loop).

9.3.5. Fire and Gas Detection Instruments

9.3.5.1. General

This chapter defines the identification of Fire and Gas Detection instruments, namely:

- Flammable Gas detectors
- Toxic Gas detectors
- Fire detectors
- Smoke detectors

- Manual alarm push buttons
- Heat (Thermo-Velocimetric) detectors

9.3.5.2. TAG formation

Fire and Gas detectors TAG is an alphanumeric code composed of five (5) Groups disposed as below:

TTT–GGG–MMM–ZZZ–LXXXT–V

Where:

- 1st Group (TTT): Detector Designation - Mandatory
  - A set of 3 characters defining the type of sensor as per Table 9-8.
  - In case a detector is not covered by the tables, the instrument's TAG must be agreed with PETROBRAS.

Table 9-8 - Detector Designation for instruments related to Fire and Gas detection.

Prefix	Fire and Gas instrument Type
AST	Gas detector
UST	Flame/Fire detector
YST	Smoke detector
HSS	Manual alarm pushbutton
TST	Heat (Thermo-velocimetric) detector

- 2nd Group (-GGG): Gas Type Designation – Mandatory only for AST
  - Same as section 9.3.4.2.
- 3rd Group (MMM): Module or Hull section – Mandatory
  - Same as section 9.3.4.2.
- 4th group (ZZZ): Zone – Mandatory
  - Same as section 9.3.4.2.
- 5th group (L): Loop – Mandatory for Addressable instruments
  - Same as section 9.3.4.2.
- 6th group (XXX): Sequential numbering – mandatory
  - A set of 3 digits indicating number of the instrument
  - For addressable instruments, the combination of the 5th group and the 6th group shall be equal to the address of the addressable instrument. See examples 9.3.6.4 and 9.3.6.6 for clarification.
- 7th group (T): Subtype indicator - optional
  - A letter indicating the subtype of target type sensors as follows:

INTERNA \ Qualquer Usuário

R → Receptor;

T → Transmitters.

- 8th group (-V): Voting indicator - optional
  - A number indicating the voting instrument for the same detection point (only for pairs or triads, not applicable for voting zones)

9.3.6. Examples of Fire and Gas Loops and Instruments

9.3.6.1. Point Gas detectors – Triad

Suppose there is an HVAC inlet for the Electric module (M-17 in this example) with a triad of sensors installed in it. These sensors are installed in zone 201. The 3 sensors are meant to detect the presence of Hydrocarbon gas.

The TAGs involved are:

· Loop A-CH4-M17-201-001, containing:

- AST-CH4-M17-201-001-1 – First Gas detector of Loop A-CH4-M17-201-001
  - Generates signals:
    - ASH-CH4-M17-201-001-1 – Detected gas alarm of instrument AST-CH4-M17-201-001-1
    - ASHH-CH4-M17-201-001-1 – Confirmed gas alarm of instrument AST-CH4-M17-201-001-1
- AST-CH4-M17-201-001-2 – Second Gas detector of Loop A-CH4-M17-201-001
- AST-CH4-M17-201-001-3 – Third Gas detector of Loop A-CH4-M17-201-001

The voting of the loop gives the following result signal:

· ASH-CH4-M17-201-001 - Detected gas alarm of Loop A-CH4-M17-201-001

· ASHH-CH4-M17-201-001 - Confirmed gas alarm of Loop A-CH4-M17-201-001Point

9.3.6.2. Gas detectors – Zone

Assume now there are sensors in the Pig Launcher and Receiver modules (M-09 in this example). The sensors are meant to detect the presence of H_2S, and are arranged in a zone configuration. Assume the number of the specific zone is 101, and that there are 5 sensors.

Therefore, the 5 TAGs involved are:

- Loop A-H2S-M09-101-001, containing:
  - AST-H2S-M09-101-001
- Loop A-H2S-M09-101-002, containing:
  - AST-H2S-M09-101-002,
- …

- Loop A-H2S-M09-101-005, containing:
  - AST-H2S-M09-101-005.

9.3.6.3. Open Path Gas detectors

Suppose there is an open path gas detector in Module M08, meant for the detection of Hydrocarbon gases, covering zone 202.

The open path detector is composed of two different sub-instruments: the transmitter and the receiver.

The TAGs involved are:

- Loop A-CH4-M08-202-001, containing:
  - Transmitter AST-CH4-M08-202-001T;
  - Receiver AST-CH4-M08-202-001R.

9.3.6.4. Smoke detector in the laboratory

Assume there is a smoke detector in the Laboratory, which is located in module 14 in this example. During basic design, it was known that this instrument would cover zone 401, but no other information was available.

During Detailed engineering design, it was decided that this instrument would be connected to the Addressable Fire Detection System (AFDS) in Loop C, and that the address of the instrument in the loop would be 004.

TAGs:

- During Basic design:
  - CAE Database Loop TAG: Y-M14-401-H001;
  - Instrument TAG: YST-M14-401-H001.
- During Detailed design:
  - CAE Database Loop: Y-M14-401-C004;
  - Instrument TAG: YST-M14-401-C004.

Information indirectly deducible from the Detailed engineering TAG:

- AFDS physical Loop: C;
- Instruments Address in Addressable system: C-004.

9.3.6.5. Flame detectors

Assume 4 flame detectors are installed in M-10 and are meant to detect the presence of fire in zone 301.

INTERNA \ Qualquer Usuário

The instrument tags shall be UST-M10-301-001, UST-M10-301-002, UST-M10-301-003, UST-M10-301-004.

- Loop U-M10-301-001, containing:
  - UST-M10-301-001.
- Loop U-M10-301-002, containing:
  - UST-M10-301-002.
- Loop U-M10-301-003, containing:
  - UST-M10-301-003,
- Loop U-M10-301-004, containing:
  - UST-M10-301-004.

9.3.6.6. Heat detector in the accommodation

Assume there is a heat detector in the second level of the accommodation. During basic design, it was known that this instrument would cover zone 201, but no other information was available.

During Detailed engineering design, it was decided that this instrument would be connected to the Addressable Fire Detection System (AFDS) in Loop D, and that the address of the system would be 003.

TAGs:

- During Basic design:
  - CAE Database Loop TAG: T-A02-201-H001;
  - Instrument TAG: TST-A02-201-H001.
- During Detailed design:
  - CAE Database Loop: T-A02-201-D003;
  - Instrument TAG: TST-A02-201-D003.

Information indirectly deducible from the Detailed engineering TAG:

- AFDS physical Loop: D;
- Instruments Address in Addressable system: D-003.

9.3.7. Instrumentation Virtual Signals

Instrumentation physical signals are tagged as per section 9.3.2.2.

However, the same signal may be represented in different systems (local panels, CSS and/or SOS), causing TAG duplication. In order to avoid this, a suffix may be added (mandatory only to avoid the overlap):

AAAAA–BBBBCCCD–FE–NN

INSTRUMENT TAG as per 9.3.2.2

Where NN represents the sequential of the signal.

Specific signals exist. Among them there are:

- UAM → Unit Alarm Malfunction (virtual signal)
- UAS → Unit Alarm Shutdown (virtual signal)
- USM → Unit Switch Malfunction (physical signal)
- USS → Unit Switch Shutdown (physical signal)

ESD signals are tagged:

XSLL–BBBBCCC

INSTRUMENT TAG as per 9.3.2.2

Or:

XSLL–M–BBBBCCC

Equipment name as per Annex 1.

9.3.8. Instrumentation Junction Boxes

The junction boxes (JB) shall be identified in accordance with the following requirements:

JBYY-AAAA-NNN

Where:

- Y defines the type of signal, where:
  - C = control signals (PCS);
  - I = interlock signals (PSD), non-fire resistant cables;
  - IF = interlock signals (PSD/FGS), fire resistant cables;
  - S = power supply signals;
- AAAA defines the area or unit;
- NNN defines the sequential number of the JB.

Examples:

- First Control Junction box of module 08.
  - JBC-1418-001
- Third Interlock FGS (containing fire resistant cables) Junction box of module 10.
  - JBIF-1421-003

9.3.9. Instrumented Valves

Instrumented valves are valves that are specified by the instrumentation discipline. Generally, they have electronic devices associated to them. Examples of these valves are:

- Control Valves;
- Choke valves;
- Shutdown Valves;
- Blowdown Valves;
- On-Off Valves;
- Deluge valves;
- Pressure safety valves;
- Buckling pin valves.

For instrumented valves' TAG, see section 9.3.2.2.

For other valves' TAG, such as manual valves and block valves see Piping chapter.

9.3.10. Instrumentation cables interconnected with instruments

Instrumentation cables (from instruments to JB, or from instruments to PNs) shall be identified as:

C–AAAAA–BBBBCCCD–FE–NNN

INSTRUMENT TAG as per 9.3.2.2

Where -NNN is the sequential number of the cable (mandatory only when there is more than one cable per instrument).

9.3.11. Instrumentation Multicables interconnected with Junction Box

Instrumentation multicables (from JB to panels) shall be identified as:

MC–JBY–SSS–AAAA–NNN–SSS

JB TAG as per section 9.3.8

Where:

- SSS represents the sequential number of the multicable.

9.4. Instrumentation Equipment

Instrumentation equipment is mainly composed of Panels, Hydraulic Power Units, and metering skids.

Sections below depict the few exceptions to Annex 1.

9.4.1. Pneumatic and Hydraulic distribution panels

Pneumatic and Hydraulic distribution panels shall be tagged as below:

TTT–MMM–AA–SS

Where:

- TTT defines the type of panel, which is rather PDA (for pneumatic) or MDH (for hydraulic);
- MMM defines the area or module as per section 9.3.5.2;
- AA is mandatory only for PDAs, defining if the air is E (essential) or NE (Not essential). In MDH, these characters are not present;
- SS represents the sequential number of the panel.

9.4.2. Automatic Sampler

Automatic sampler shall be tagged as:

AX–BBBBCCC

Associated part of Flow meter TAG as per section 9.3.2.2

Example:

Assume there is a Flow metering point FIT-1212002, close to an automatic sampler.

The Automatic Sampler TAG is AX-1212002. If an associated panel is connected to it, its TAG shall be PN-AX-1212002.

9.4.3. Flow Metering System Manual Sampling Points

Flow metering system Manual Sampling points shall be tagged as:

SC–FIT–BBBBCCC

Associated part of Flow meter TAG as per section 9.3.2.2

Assume there is a manual Sampling point right next to FIT-1212002. The sampling point TAG is SC-FIT-1212002.

INTERNA \ Qualquer Usuário

Other sampling points (not related to the flow metering system) shall be tagged as per Annex 1.

9.5. Instrumentation Piping

9.5.1. Straight Pipe Run for Flow Metering Points and Flow Rectifiers

Straight Pipe Runs are piping spools, which are placed before and after a flow meter in order to eliminate turbulences caused by other piping elements such as other instruments, piping curves, and valves.

Flow rectifiers are elements that are occasionally placed in the straight run in order to reduce the turbulences, and therefore, to reduce the straight pipe run total size.

Due to their importance and the regular inspection to which they are submitted, straight pipe runs and flow rectifiers are tagged as follows:

F<u>P</u>–BBBBCCCD–FE–<u>N</u>

Associated part of Flow meter TAG as per section 9.3.2.2

Where:

- P defines the position of the straight run and flow rectifiers relative to the instrument:
  - X → element is upstream of the flow meter;
  - Y → element is downstream of the flow meter;
- N is a number representing the sequential of the straight run or flow rectifier, counting from upstream to downstream. It is only required in case there is a flow rectifier or other elements in between the straight runs.

Examples:

- Magnetic flow meter FIT-1223001 has one straight pipe run upstream and one straight pipe run downstream. The TAGs are:
  - FX-1223001 → Upstream straight pipe run;
  - FY-1223001 → Downstream straight pipe run.
- Orifice plate, with associated transmitter FIT-1223002, with 2 piperuns upstream (the first one upstream of the zanker, the second one downstream of the zanker) and 1 straight run downstream.
  - FX-1223001-1 → First Upstream straight pipe run (upstream of the zanker);
  - FX-1223001-2 → Zanker TAG
  - FX-1223001-3 → Second Upstream straight pipe run (downstream of the zanker);
  - FY-1223001 → Downstream straight pipe run.

INTERNA \ Qualquer Usuário

Some flow meters may not have dedicated spools as straight pipe runs. These flow meters are directly inserted in the piping. In this case, the piping TAG is not changed (remains as per chapter 5.

9.5.2. Instrumentation adapting flanges and process connection flanges

Instrumentation adapting flanges and process connection flanges are piping components which are placed after the piping block valve of an instrument. They convert the process flange connection into either capillary or tubing lines, but they are not well probes (TW, for example) nor sensing elements (TE, for example). See Figure 9.1 for an example of adapting flanges.

Figure 9.1 – Examples of instrumentation adapting flanges

These elements are present in the 3D Model according to Figure 9.2. The highlighted instrument on the left is the process connection of the pressure instrument, on the right.

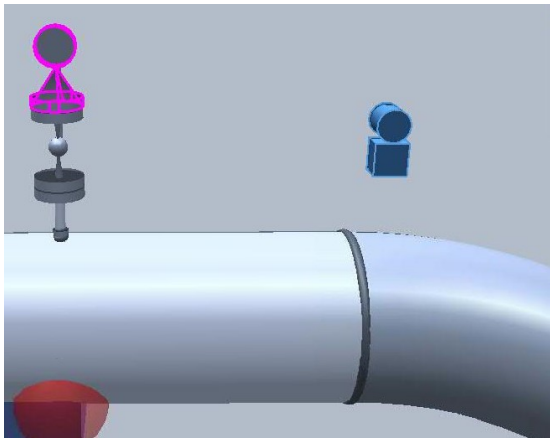

Figure 9.2 – 3D model representation of adapting flanges application. On the left (highlighted), the adapting flange. On the right, the corresponding instrument.

The TAG formation for these adapting flanges shall be:

CONN–SS –AAAAA–BBBBCCCD–FE

INSTRUMENT TAG as per 9.3.2.2.

Where -SS is a sequential number mandatory only if the same instrument has more than one process connection.

Examples:

A pressure indicator and transmitter PIT-1223001 presents an instrumentation connecting flange to the process. Its TAG shall be CONN-PIT-1223001.

A level indicator and transmitter LIT-1223001 presents 2 instrumentation connecting flanges to the process. Their TAGs shall be CONN-01-LIT-1223001 and CONN-02-LIT-1223001.

9.5.3. Instrumentation Tubing

Instrumentation tubing is a series of small diameter lines, which are bent into their final shape in the field.

Instrumentation tubing TAG does not need to be displayed in P&IDs. It is only needed during the detailing phase, for the pneumatic/hydraulic drawing and/or the 3D model.

Instrumentation tubing shall be tagged as follows:

T–SS–AAAAA–BBBBCCCD–FE

INSTRUMENT TAG as per 9.3.2.2

Spools of tubing are not tagged separately.

Where -SS is a sequential number mandatory only if the same instrument has more than one tubing connected to it.

9.6 Machinery Protection System (MPS)

Machinery Protection System (MPS) instruments' TAGs shall be defined according to the procedure below:

- Radial vibration X-probe: VXE-AAAABBBC.
- Radial vibration Y-probe: VYE-AAAABBBC.
- Radial vibration X-proximitor: VXT-AAAABBBC.
- Radial vibration Y-proximitor: VYT-AAAABBBC.
- Axial position probe 1: ZE-AAAABBBC-1.
- Axial position probe 2: ZE-AAAABBBC-2.
- Axial position proximitor 1: ZT-AAAABBBC-1.
- Axial position proximitor 2: ZT-AAAABBBC-2.
- Phase probe: KE-AAAABBBC.
- Phase proximitor: KT-AAAABBBC.
- Casing vibration probe: VE-AAAABBBC.
- Bearing temperature probe 1: TE-AAAABBBC-1.
- Bearing temperature probe 2: TE-AAAABBBC-2.
- Dynamic pressure transmitter for pulsation monitoring: PKT-AAAABBBC.
- Torsional vibration probe: VWE-AAAABBBC.

INTERNA \ Qualquer Usuário

• Torsional vibration transmitter: VWT-AAAABBBC.

Being "AAAA" the area of activity, "BBB" the sequential number and "C" the train.

The sequential number “BBB” shall be defined in order to avoid TAG duplication when machines of different services share the same area of activity “AAAA”.

The sequential number “BBB” shall begin in the Non Drive End of the driver machine and increase towards the Non Drive End of the driven machine.

X-Y probes used for radial vibration monitoring, shall be referenced viewing the train from driver machine towards the driven machine. Y-probe shall be 90° counter-clockwise from X-probe, regardless of the direction of shaft rotation.

INTERNA \ Qualquer Usuário

10. ELECTRICAL

Identification TAGs of electrical equipment shall be defined according to requirements of Annex 1 and considering alternative of "System number/area of activity" described in EXHIBIT III.

I-ET-3010.00-5140-700-P4X-001 - SPECIFICATION FOR ELECTRICAL DESIGN FOR OFFSHORE UNITS defines requirements of identification codes for the following items:

- cable trays for electrical, instrumentation and telecommunication cables;
- supports for cable trays, lighting poles, control boxes, junction boxes, socket-outlets, instruments, lighting fixtures and floodlights;
- socket-outlets;
- junction boxes related to Electrical;
- electrical cables for power, lighting, heating, control and protection circuits (not applicable for Telecommunication cables. For Instrumentation cables see item chapter 9);
- Multi cable transit (MCT);
- lighting fixtures and floodlights.

Any other identification TAG criteria included in I-ET-3010.00-5140-700-P4X-001 - SPECIFICATION FOR ELECTRICAL DESIGN FOR OFFSHORE UNITS and not listed above shall be complied with.

Identification codes for electrical system instruments and electrical signals shall be defined by Hull Contractor and Bidder and shall be submitted to PETROBRAS approval.

INTERNA \ Qualquer Usuário

11. STRUCTURE

11.1. TOPSIDE STRUCTURAL ELEMENTS

This section aims to guide the construction of TAGs for topside structural elements (i.e. beams, columns, braces and plates), local coordinate systems and grids planes present in 3D CAE model

Essentially, the definition of TAG for topside's structural elements is based on their properties, classification, type and location at platform and indicated through abbreviations as detailed on section 11.1.2.

Besides that, each type of structure has a different hierarchy on 3D software which also needs an identification. For linear structural elements such as columns, beams and braces there are the main hierarchy named "Member System" and the secondary hierarchy "Member part" and shall be tagged as follows:

- **LINEAR ELEMENT – MEMBER SYSTEM**

  TAG: StructureClassification-LocationAtPlatform-SequentialNumber

- **LINEAR ELEMENT – MEMBER PART**

  TAG: TypeOfStructure-ProfileSection-SequentialNumber

  Example: Primary Beam located at M15 pancake with W610x113 section

  Member System – PS-M15-0000001

  Member Part – Bm-W610x113-0000001

For surface structural elements, as for example slabs, plates, gratings and coamings, there are three levels of hierarchy: "Root Plate System, "Leaf Plate System" and "Plate Part", respectively. For tagging purposes, are considered only the first two levels and are named as presented below:

- **SURFACE ELEMENT – ROOT PLATE SYSTEM**

  TAG: StructureClassification-LocationAtPlatform-SequentialNumber

- **SURFACE ELEMENT – LEAF PLATE SYSTEM**

  TAG: TypeOfStructure-Thickness-SequentialNumber

  Example: 8mm deck plate (slab) located at second level of M07

  Root Plate System – SS-M07-0000001

  Leaf Plate System – Sl-8mm-0000001

If a single outfitting is defined as unique structure, its parts shall be named according to next rules:

- **OUTFITTING ELEMENT**

  TAG: StructureClassification-LocationAtPlatform-SequentialNumber

  Example: Ladder located at first level of M01

  Root Plate System – OFLD-M01-0000001

INTERNA \ Qualquer Usuário

11.1.1.LOCAL COORDINATE SYSTEM AND GRID PLANES

For local coordinate system related to each process module and other topsides structures, its tag shall be according to with the next definition:

TAG: LocationAtPlatform-CS

Example: Local coordinate system of M15

TAG - M15-CS

Additionally, there are structural grids that are directly related to a local coordinate system and are composed by planes defined on three main directions (X – Longitudinal, Y – Transversal and Z). Therefore, its tags shall identify these planes and be according to its position in relation of vessel's global coordinate system.

Consequently, the tagging shall be as follows:

Planes at X-axis (YZ) - LocationAtPlatform-FR**XXX**
XXX is the vessel's frame number where the plane is located.

Planes at Y-axis (XZ) - LocationAtPlatform-L**YYY**
YYY is the vessel's longitudinal number where the plane is located.

Planes at Z-axis (XY) - LocationAtPlatform-EL**AAAAA**
AAAAA is the elevation from the vessel's keel line (in millimeters) where the plane is located

11.1.2.ABBREVIATION

Finally, the abbreviations for each variable for tag composition shall be according to the following definitions:

i. Structure Classification – defined by the importance of the element in the global structural resistance
   a. Primary Structure – PS
   b. Secondary Structure – SS
   c. Monorail - MR
   d. Outfitting – OF – For general elements defined as surfaces or linear items
   e. Outfitting (Ladder) – OFLD (For unique structure)
   f. Outfitting (Stair) – OFSR (For unique structure)
   g. Outfitting (Handrail) – OFHR (For unique structure)
   h. Outfitting (Pad eye) – OFPD (For unique structure)

ii. Location at Platform
   a. Process Module – M01 to M18
   b. Crane - CR
   c. Flare Tower – FT
   d. Pipe Rack – PR
   e. Riser Pipe Rack – RPR
   f. Equipment base – EB
   g. Hull – HL

iii. Type of Structure
   a. Column – CO

b. Beam – BM
c. Brace – BR
d. Slab – SL
e. Plate – PL
f. Grating – GR

iv. Thickness (only for surface elements) - Value of the thickness in millimeters followed by "mm"

v. Profile Section (only for linear elements) – Catalog or usual name for the structural profile according to I-ET-3010.00-1400-140-P4X-001 – Structure Plates and Profiles Catalogue

vi. Sequential Number – Defined to distinguish the elements and composed by seven characters

11.2. HULL STRUCTURAL ELEMENTS

This section aims to guide the construction of TAGs for hull's structural elements present in 3D CAE model.

Element localization shall be in accordance with the following rule:

- **Plates and brackets:**
  a) Root Plate System

     TAG: LocationAtHull-TransversalLocalization-LongitudinalLocalization-HullSide-HULL-SequentialNumber

  b) Surface Element – Leaf Plate System

     TAG: TypeOfStructure-Thickness-SequentialNumber

- **Longitudinals:**
  Root Plate System

  TAG: LocationAtHull-TransversalLocalization-LongitudinalLocalization-HullSide-HULL-SequentialNumber

  Root Profile System

  TAG: TypeOfStructure-ProfileSection-SectionProperties-SequentialNumber

- **Outfitting:**

  For unique outfitting structure, consider the following tagging rule:

  TAG: TypeofOutifitting-LocationAtHull-TransversalLocalization-LongitudinalLocalization-HullSide-HULL-SequentialNumber

  If a single outfitting is not a unique structure, its parts shall be named according to previous rules.

11.2.1.LOCATION AT HULL

For element location at the hull, refer to Table 11.1.

Table 11.1 - Hull main parts tags

Hull Location	TAG
Main Deck	MD
Side Shell	SSH
Bottom	BL
Longitudinal Bulkhead	LBH
Transversal Bulkhead	TBH
Stringer X	STR-X
Frame	FR
Marine Pipe Rack	MPR
Pull-In	PI
Diving Station	DVS
Fender Back	FEB
Crane Seats	CS
Mooring Balconies	MB
Fairleads	FLD
Upper riser balcony	URB
Lower riser balcony	LRB
Caisson	CAI
Vent Post	VP
Well stimulation	WS
Helideck	HLD
Accommodation	ACC
Machine Room Deck X	MCR-X
Sea Chest	SCH
Stool	STO

If the structure is made of linear elements, such as marine pipe-rack and pull-in, address to the adopted TAG representation for Topside structures, considering the field LocationAtPlatform the TAG presented in Table 11.1, and adding the word “HULL” to the TAG. For example, marine pipe rack root plate system would be “MPR-StructureClassification-HULL-SequentialNumber”.

INTERNA \ Qualquer Usuário

If any structure is not listed in Table 11.1, their TAG shall be agreed with Petrobras.

11.2.2. TRANSVERSAL LOCALIZATION

It shall identify the frame where the structure is located. For structures that starts in one frame and finishes in the next one, it shall be used the number of the starting frame.

If the structure finishes between frames and is not connected to either of them, it shall be used the frame with smaller sequential.

The tag must contain the following syntax: FRXX, where XX is the frame number.

11.2.3. LONGITUDINAL LOCALIZATION

It shall identify the longitudinal where the structure is located. For structures that starts in one longitudinal and finishes in the next one, it shall be used the number of the starting longitudinal.

If the structure finishes between longitudinals and is not connected to either of them, it shall be used the longitudinal with smaller sequential.

The tag must contain the following syntax: LYY, where YY is the longitudinal number.

Longitudinal LYY shall be numbered according to its plate position and in accordance with the following rule:

Main Deck: ascending order from the center line towards the side shell;

Bottom: same as main deck;

Transversal bulkhead: same as main deck;

Side shell: ascending order from the base line towards the main deck;

Longitudinal bulkhead: same as side shell.

11.2.4. HULL SIDE

It defines in which side of the hull the structure is located.

The tag must contain the following syntax: PS for Portside or SS to Starboard.

11.2.5. SEQUENTIAL NUMBER

When more than one element with the same characteristics are in the same location, they shall differ by the sequential number (seven characters long). Order shall be the same as LYY order presented in section 11.2.3.

11.2.6. TYPE OF STRUCTURE

For the type of structure tag, refer to Table 11.2.

Table 11.2 - Structural elements types tags

Structural Elements Types	TAG
Plate	PL
Bracket	BKT
Flange	FLG
Double Plate	DBP

11.2.7.THICKNESS

This field represents plate thickness. All specified thickness shall be in millimeters (mm).

11.2.8.PROFILE SECTION

This TAG is to identify the profile section type, in accordance with Table 11.3.

Table 11.3 – Profile Sections TAGs

Profile Section	TAG
Flat Bar	FB
L	L
T	T
Bulb	B
Reinforcements that fit none of the above criteria	REF

11.2.9.SECTION PROPERTIES

Section Properties shall be presented in this field, separating length and thickness with a “x” sign. If there is a flange in the profile, web section comes first, then a “+” sign and then the flange section. All dimensions shall be in millimeters.

For instance, a flat bar with 100 mm in length and 12 mm thickness, section properties field will be 100x12. If the section is a “T” composed by a web equal to the previous flat bar and a flange of a length of 20 mm and 8 mm thickness, this field will be 100x12+20x8.

For bulb profiles, this field shall be the name of the profile being used in the project.

If profile section is REF, Petrobras shall be consulted in the way that this field will be completed.

11.2.10. TYPE OF OUTFITTING

This TAG is to identify the type of outfitting being considered, in accordance with Table 11.4.

Table 11.4 – Type of outfitting TAGs

Type of Outfitting	TAG
Ladder	OFLD
Stair	OFSR
Handrail	OFHR
Pad eye	OFPD
Anode	OFAN
Grating	OFGR
Hatch Cover	OFHC
Outfitting that fit none of the above criteria	OF

INTERNA \ Qualquer Usuário

11.2.11. EXAMPLES

This section presents an example for tagging hull structure.

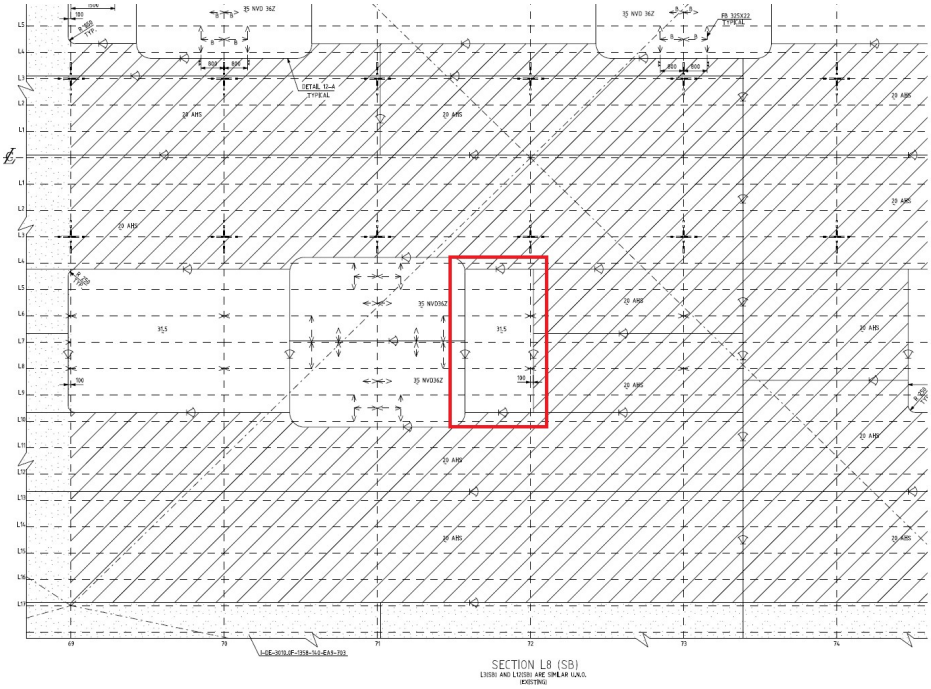

Figure 11.1 - Image from drawing I-DE-3010.0F-1358-140-EA9-706_F (FPSO P-74)

Plate:

Plate highlighted in Figure 11.1 is located at the main deck, starboard, is located between L4 and L10 and starts in frame 71. Considering this, plate tag will be:

Root Plate System – MD-FR71-L4-SB-HULL-0000001

Leaf Plate System – PL-31.5mm-0000001

Bracket:

If there is a bracket or stool in this plate, their tag will be:

Root Plate System – MD-FR71-L4-SB-HULL-0000001

Leaf Plate System – BKT-12mm-0000001

Longitudinal:

Considering the longitudinal number 45 in the portside longitudinal bulkhead, starting in frame 71, a “T” profile and section”400x20+150x15”. It tag will be:

Root Plate System – LBH-F71-L45-PS-HULL-0000001

Root Profile System – LG-T-400x20+150x15-0000001

Outfitting:

Considering the anode located in the bottom longitudinal number 3 (portside), between frames 98 and 99. It tag will be:

- OFAN-BL-FR98-L3-PS-HULL-0000001

12. MARINE SYSTEMS

Identification TAGs of Marine System equipment shall be defined according to requirements of Annex 1 and considering alternative of “System number/area of activity” described in EXHIBIT III.

This Standard establishes the conditions required for the identification of equipment belonging to industrial facilities of PETROBRAS.

This Standard does not apply to measurement and control instruments nor to piping items. For these items, refer to Automation and Piping sections.

In all documents pertaining to an industrial equipment or in documents where reference is made to an industrial equipment, the industrial equipment shall be identified according to Annex 1.

INTERNA \ Qualquer Usuário

13. TELECOMMUNICATION

Identification TAGs of Telecom equipment shall be defined according to requirements of Annex 1 and considering alternative of "System number/area of activity" described in EXHIBIT III.

This Standard establishes the conditions required for the identification of equipment belonging to industrial facilities of PETROBRAS.

In all documents pertaining to an industrial equipment or in documents where reference is made to an industrial equipment, the industrial equipment shall be identified according to Annex 1.

Some telecommunication items were not yet included in Annex 1. Meanwhile, project shall also follow table below:

Table 13-1 TELECOMMUNICATION EQUIPMENT TAGs

TAG	EQUIPMENT DESCRIPTION
ACO	DIRECTIONAL COUPLER
ACR	AERONAUTICAL COMMUNICATIONS RECORDER
AFT	CEILING LOUDSPEAKER
AIS	AUTOMATIC IDENTIFICATION SYSTEM
AMP	AUDIO AMPLIFIER
ANT	ANTENNA
AP	WLAN ACCESS POINT
ASC	ANTENNA STABILIZATION CONTROL UNIT
ATV	TV AMPLIFIER
AVM	AUDIO AND VIDEO MONITOR
BAS	RACK FOR HOUSING EQUIPMENTS
BCA	ALARMS COMMAND SWITCH (ABANDON, EMERGENCY AND RESET)
BLT	BUZZER AND LIGHT TELEPHONE SIGNALING
BUZ	BUZZER
CAC	ACOUSTIC BOX
CAM	CAMERA
CCD	DATA CONNECTION BOX
CCT	TELECOMMUNICATION CONNECTION BOX
CDC	CODEC
CDI	INTERCOMMUNICATION DISTRIBUTOR BOX
CDT	TELEPHONE DISTRIBUTION BOX
CFI	INTERCOMMUNICATION WIRING BOX

INTERNA \ Qualquer Usuário

TAG	EQUIPMENT DESCRIPTION
CFT	TELEPHONE WIRING BOX
CIR	CIRCULATOR
CIT	PUBLIC ADDRESS CENTRAL STATION
CJE	ELECTRICAL JUNCTION BOX
CJI	INTERCOMMUNICATION JUNCTION BOX
CJS	CONNECTION BOX
CJT	TELEPHONE JUNCTION BOX
CMP	ELECTRONIC BELL
COM	COMBINER – Nx1
COR	ACOUSTIC HORN
CR	RELAY BOX
CRE	REMOTE CONTROL
CRO	OPERATIONAL RADIO CONSOLE
CTA	ALARMS TONE GENERATOR
CTF	PRIVATE AUTOMATIC BRANCH EXCHANGE
CTV	CCTV Rack
CW	WLAN CONTROLLER
CXF	FUSE BOX
DCD	DIGITAL SATELLITE DECODER (KU BAND)
DGI	GENERAL INTERCOMMUNICATION DISTRIBUTOR
DGT	GENERAL TELEPHONE DISTRIBUTOR
DIO	OPTICAL INTERNAL DISTRIBUTOR
DIV	SPLITTER
DSR	DIGITAL SATELLITE RECEIVER
DTV	TV CHANNEL DISTRIBUTOR
DVD	DVD PLAYER
DVR	DIGITAL VIDEO RECORDER
ECC	PAGE PARTY STATION
ECD	DATA COMMUNICATIONS EQUIPMENT
ENC	ENCODER HDMI/IP
FAI	POWER SUPPLY FOR PUBLIC ADDRESS STATION
FAX	FAX

INTERNA \ Qualquer Usuário

TAG	EQUIPMENT DESCRIPTION
FCC	DIRECT CURRENT POWER SUPPLY
FP	AUDIO PROGRAM SOURCE
FW	FIREWALL
GK	ACCESS MEDIA GATEWAY / GATEKEEPER
GT	TESTS TONE GENERATOR
HCS	HYBRID / SIGNAL CONVERTER
HDI	HIGH-DEFINITION-MULTIMEDIA INTERFACE IP (HDMI IP)
IMP	PRINTER
INC	INMARSAT C
INM	INMARSAT TRANSCEIVER
JB	JUNCTION BOX
LSE	EMERGENCY LAMP
LST	TELEPHONE SIGNALLING LAMP
MAV	AUDIO AND VIDEO MODULATOR
MCT	MUTI-CABLE TRANSIT BOX
MD	MODEM
MI	MICROCOMPUTER (WORKSTATION)
MIC	MICROPHONE
MP	PRIORITY MICROPHONE
MTV	TV CHANNEL MIXER
MUX	MULTIPLEX EQUIPMENT (OPTICAL/SDH/TDM)
NVR	NETWORK VIDEO RECORDER
OW	WAN OPTIMIZATOR
PD	RF SIGNAL SPLITER
PDD	DATA DISTRIBUTOR PANEL
PPN	PATCH PANEL
PS	SURGE ARRESTOR
PTV	TV RACK
QCA	TELECOMMUNICATION AC DISTRIBUTION PANEL
QCC	TELECOMMUNICATION DC DISTRIBUTION PANEL
RDO	DIGITAL RADIO
RPT	UHF ACTIVE REPEATER SYSTEM RACK

INTERNA \ Qualquer Usuário

TAG	EQUIPMENT DESCRIPTION
RT	ROUTER
RX	RADIO RECEIVER
SAT	SATELLITE MODEM
SCV	VOLUME CONTROL
SR	C BAND RECEPTOR
SRT	RADAR TRANSPONDER FOR SEARCH AND RESCUE OPERATION
SSA	SHIP SECURITY ALERT SYSTEM
STB	SETUP BOX IP/HDMI
STO	ANTENNA TUNER / COUPLER
SVR	SERVER
SW	SWITCH
TAP	DIRECTIONAL COUPLER
TEL	TELEPHONE
TER	UHF LOAD UP
TMD	DATA PLUG SOCKET
TRX	RADIO TRANSCEIRVER
TT	TELECOMMUNICATION TOWER
TTF	TELEPHONE PLUG SOCKET
TTV	TV PLUG SOCKET
TV	TV EQUIPMENT
TVT	TV TRANSMISSOR
TX	RADIO TRANSMITTER
UAM	ACCESS UNIT
UCA	AC MONITORING UNIT
UCC	CONVERSATION AND ANNOUNCEMENT UNIT
UCO	CONTROL UNIT
UDQ	DROPPING DIODE UNIT
USC	DC MONITORING UNIT

Telecommunication cables shall be identified as per table below:

Table 13-2 TELECOMMUNICATION CABLE IDENTIFICATION

TAG	CABLE IDENTIFICATION

INTERNA \ Qualquer Usuário

TAG	CABLE IDENTIFICATION
Cal	"C" ALARMS AUDIO CABLE
Cam	"A" PAGING, "M" MUSIC AND "C" ALARMS AUDIO CABLE
Cat	ANTENNA CABLE
Cav	AUDIO AND VIDEO CABLE
Cbb	MULTIPLEX BASE BAND CABLE
Cbm	"B" PAGING, "M" MUSIC, AND "C" ALARMS AUDIO CABLE
Cca	"A" PAGING AND "C" ALARMS AUDIO CABLE
Ccb	"B" PAGING AND "C" ALARMS AUDIO CABLE
Ccr	REMOTE CONTROL CABLE
Ccs	ALARM COMMAND SWITCH CABLE
Ccv	SOUND TRANSDUCER VOLUME CONTROL CABLE
Cea	AC ENERGY CABLE FOR TELECOMMUNICATION
Cec	DC ENERGY CABLE FOR TELECOMMUNICATION
Cem	SOUND TRANSDUCER MUTE CABLE
Cen	POWER SUPPLY CABLE
Cfo	OPTICAL CABLE
Cin	INTERCOMMUNICATION CABLE FOR ECC's
Cmu	"M" MUSIC AND "C" ALARMS AUDIO CABLE
Cre	STRUCTURED NETWORK CABLE
Cte	TELEPHONE CABLE
Crf	RF CABLE
Csa	ANTENNA TUNER/COUPLER CABLE
Ctv	TV CABLE

All telecommunications cables shall be tagging, as follow:

- cable TAG - From (Complete TAG of equipment) - sequential number

Examples: Cte-CDT-5516-501.01

Cca-COR-5518-505B.01

INTERNA \ Qualquer Usuário

14. 3D MODEL (ALL DISCIPLINES)

For volumes on 3D model, tagging shall be as the following procedure:

(A)(-)(B)(-)(C)

Where:

(A) = Abbreviation, according to Table 14-1.

(-) = hyphen

(B) = sequential code (three numbers)

(-) = hyphen

(C) = Volume purpose. If this volume is related to a specific object, C must be equal to its tag. If it is not related to a specific object, C must be equal to the function and the area (separated by hyphen "-"). The function shall be selected from X and the area must be selected from Y.

Table 14-1 - Abbreviations for volumes.

Volume characteristic	Abbreviation
Regions that must be interference free	VOL
Physical spaces limits	LIM
Optional volumes that might be used for automatic drawings generation	DRAW

Table 14-2 Abbreviations for functions.

Abbreviation	Functions
BOUND	Limit
CBLTRY	Cable tray
CGHDL	Cargo handling
CLAREA	Classified area
DETEC	Flame detectors range
DOOR	Door opening
DRGHT	Draught
ESCRT	Escape route
FUT	Future
HLDKOP	Helideck obstacle free setor
LIFT	Lifting
MAINT	Maintenance
OPER	Operation

INTERNA \ Qualquer Usuário

Abbreviation	Functions
PCKG	Package
PPAR	Piping area
ROOM	Closed room
SPRK	Sprinklers

Table 14-3 Abbreviations for areas.

Abbreviation	Areas
ACCM	ACCOMODATION
AFTEXT	AFT EXTENSION
BOATSW	BOATSWAIN STORE
CRPD	CRANE PEDESTAL
CSSN	CAISSON
DVST{1 digit number}	DIVING STATIONS
ENGR	ENGINE ROOM
FLLST	FILLING STATION
FLR	FLARE
FLRFN	FLARE FOUNDATION
FNDR	FENDER
FRCST	FORECASTLE
FREXT	FORE EXTENSION
FRLD	FAIRLEAD
HDPP	HARD PIPE
HLDK	HELIDECK
HULL	HULL
LAYDWN{1 digit number}	LAY DOWN AREAS
LFBTPL	LIFEBOAT PLATFORM
LWRB	LOWER RISER BALCONY
M{2 digits number plus letter}	TOPSIDE MODULES
M{99A}LAB	MODULE {99A} LABORATORY
M{99A}ROOMS	MODULE {99A} ROOMS
MDK	MAIN DECK

INTERNA \ Qualquer Usuário

Abbreviation	Areas
MPPRK	MARINE PIPERACK
MRGBCN	MOORING BALCONY
OFFL	OFFLOADING
PLLIN	PULL IN
PPDK	POOP DECK
PRLBD	PARALLEL BODY
PUMPR	PUMP ROOM
RSPPRK	RISER PIPERACK
SAD	STRUCTURE ABOVE DECK
SBPPRK	STARBOARD PIPERACK
SSWN	SIDE SHELL WINCHES
STEEGR	STEERING GEAR ROOM
TEMP	TEMPORARY OBJECTS
TKACC	STRUCTURAL TANKS ACCESS
TWGST	TOWING STATION
UPRB	UPPER RISER BALCONY
VNTPT	VENT POST
WSTM	WELL STIMULATION SUPPORT

Examples:

a) First volume reserved to panel PN-1220001 future expansion (future indication would be stored within an attribute): VOL-001-PN-1220001

VOL: Regions that must be interference free

001: Sequential Numbering

PN-1220001: Related object tag

b) Second volume reserved to pump B-1221001A operation (operation indication would be stored within an attribute): VOL-002-B-1221001A

VOL: Regions that must be interference free

002: Sequential Numbering

B-1221001A: Related object tag

c) First volume reserved to pump B-1221001A maintenance (maintenance indication would be stored within an attribute): VOL-001-B-1221001A

VOL: Regions that must be interference free

INTERNA \ Qualquer Usuário

001: Sequential Numbering

B-1221001A: Related object tag

d) First volume reserved to cargo handling in module 1: VOL-001-CGHDL-M01

VOL: Regions that must be interference free

001: Sequential Numbering

CGHDL-M01: cargo handling in module 1

e) First volume reserved to escape route in module 1: VOL-001-ESCRT-M01

VOL: Regions that must be interference free

001: Sequential Numbering

ESCRT-M01: escape route in module 1

f) First volume reserved to classified area in module 1: LIM-001-CLAREA-M01

LIM: Physical spaces limits

001: Sequential Numbering

CLAREA-M01: classified area in module 1

INTERNA \ Qualquer Usuário

15. SUBSEA

15.1. Subsea structures shall follow the tagging procedure of this chapter.

15.2. Riser Supports

Riser support shall observe the below pattern:

SLOT-XXY

Where,

- "XX" is the Slot number of the respective support numbered from aftward to forward;
- "Y" identifies the support type: S for Receptacle, T for Special tube or empty for BSDL.

15.3. Hullside Hardpiping

The hullside hardpiping and respective interface spools shall observe the below pattern:

HP-XXY

Where,

• "XX" is the Slot number of the respective support numbered from afterward to forward;

• "Y" identifies the support type: S for Receptacle or T for Special tube.

15.4. Spools

The interface spools for connection of risers and top side shall observe the below pattern:

SPL-XXY

Where,

• "XX" is the Slot number of the respective support numbered from aftward to forward;

• "Y" identifies the support type: S for Receptacle or T for Special tube.

15.5. Hullside umbilical

The hullside umbilical of Riser Support Control System shall observe the below pattern:

UMB-XX

Where XX is a sequential number, counting from aftward to forward

15.6. Bell Mounth

All bell mouths must be identified through indelible painting in high level, according to the below pattern, differing from TSUDL to BSDL:

TSUDL-XX or BSDL-XX

Where XX is a sequential number, counting from aftward to forward.

INTERNA \ Qualquer Usuário

16. ANNEX 1

16.1. SCOPE

16.1.1. This Annex establishes the conditions required for the identification of equipment belonging to industrial facilities of PETROBRAS.

16.1.2. This Annex does not apply to measurement and control instruments, which are identified according to standard ISA S 5.1, nor to the identification of piping, which shall comply with I-ET-3010.XX-1200-200-P4X-XXX - Piping Specification for Topside and Piping Specification for Hull.

16.2. SYSTEMATIC PROCEDURE FOR IDENTIFICATION

16.2.1. In all documents pertaining to an industrial equipment or in documents where reference is made to an industrial equipment, the industrial equipment shall be identified according to items 15.2.2 and 15.2.3.

16.2.2. All equipment shall be individually identified by an alphanumeric combination composed of the following elements:

a) Equipment symbol (see note);

b) Identification of the area or unit where the equipment is located;

c) Sequential identification of the equipment within the area or unit;

d) Individual identification of each equipment (when applicable).

Note: The following symbols shall not be used, because they are part of the ”Equipment Registration System”: BA, BD, BF, BG, BO, BS, CA, CC, EI, LE, ME and MS.

16.2.3. The identification elements of equipment shall be written in the sequence indicated in item 15.2.2. There shall be a hyphen between the equipment symbol and the rest of the identification. The rest of the identification shall be written without separation, except when it is necessary to use graphic symbols such as “-” or “/”, where permitted.

16.3. DESCRIPTION OF IDENTIFICATION ELEMENTS

16.3.1. Equipment Symbol

The equipment symbol shall be composed of 1 to 3 capital letters. Item 15.4 is a list of the equipment symbols.

16.3.2. Identification of Area or Unit

The identification of the area or unit within industrial facility where the equipment is located shall be comprised of a group of numbers, according to EXHIBIT III.

16.3.3. Sequential identification of the Equipment within the Area or Unit

The identification of the equipment within the area or unit is composed of 3 numbers in numerical sequence from 001 to 999.

Example

TQ-6300005 – 5th tank (TQ) of area 6300.

16.3.4. Individual Identification of Each Equipment

INTERNA \ Qualquer Usuário

It shall be composed of a capital letter, starting with A, and shall only be used in those cases in which there are 2 or more equipment with the same function and located in the same area or unit; the letter shall be placed after the number, without separation. Gas storage tanks (TQ), cylinders (CN, LP, LR, RP) and spheres (EF) are an exception only in the Downstream area. A different numerical identification shall be given to each equipment, with the final letter for individual differentiation being dispensed with. Examples:

P-2211002A

P-2211002B

It means: 2 identical heat exchangers (P) with the same function (A and B), having the same sequential number 002, belonging to area 2211.

16.3.5. Joint Identification of Equipment Having the Same Function

In those cases where it is necessary to summarize in a single identification equipment with the same function and located in the same area or unit, the character "/" shall be used for separating the first from the last existing one.

Example:

In a unit in which there are 8 (eight) pig launchers LP-1223001A, LP-1223001B, LP-1223001C, LP-1223001D, LP-1223001E, LP-1223001F, LP- 1223001G, and LP-1223001H, the summarized identification of the group shall be LP-1223001A/H.

16.3.6. Driving Equipment Having

The identification shall be composed of the symbol for the driving equipment followed by the identification of the driven equipment, the 2 parts being separated by a hyphen.

Examples:

M-B-6210002 - Electric motor (M) which drives the second (002) pump (B) which belongs to area 6210.

TS-GE-5140001 - Gas Turbine (TS) which drives the first (001) electric power generator (GE) of area 5140.

16.3.7. Auxiliary Equipment

16.3.7.1. The identification of the auxiliary equipment of another main equipment shall be composed of an auxiliary equipment, symbol followed by a hyphen and by the complete identification of the main equipment. Example:

VE-F-2211002 - Fan (VE) of the second (002) furnace (F) of area 2211.

16.3.7.2. If there are 2 or more identical auxiliary equipment with the same function and connected to the same main equipment, the identification of each of the auxiliary equipment shall be completed by a capital letter, starting with A, following the identification of the main equipment, preceded by a hyphen. Examples:

B-C-5134003A-A and B-C-5134003A-B - 2 identical lubricating pumps (B) with the same function (A and B) of the third (003) compressor (C) of a group of identical compressors with the same function, which belongs to area 5134.

INTERNA \ Qualquer Usuário

16.3.7.3. Whenever there are 2 or more auxiliary equipment items, of the same type and connected to the same main equipment, but which are not identical to each other, the identification of each of the auxiliary equipment items shall be completed by 3 numbers from 001 to 999, following the identification of the main equipment and separated by a hyphen. Examples:

a) P-C-5134004-01 and P-C-5134004-02 - First (01) and second (02) coolers (P) of the fourth (004) compressor (C), which belongs to area 5134.

b) B-C-5134001A - Lubricating Oil Pump of compressor 001A of area 5134;

B-C-5134001B - Lubricating Oil Pump of compressor 001B of area 5134.

Note: It should be briefly summarized as: B-C-5134001A/B.

c) Identical pumps with the same function:

- B-C-5134001A-A - Lubricating Oil Pump A of compressor 01A, which belongs to area 5134;

- B-C-5134001A-B - Lubricating Oil Pump B of compressor 01A, which belongs to area 5134;

- B-C-5134001B-A - Lubricating Oil Pump A of compressor 01B, which belongs to area 5134;

- B-C-5134001B-B - Lubricating Oil Pump B of compressor 01B, which belongs to area 5134.

Note: It should be briefly summarized as: B-C-5134001A/B - A/B.

d) Different pumps:

- B-C-5134001A-01 - Pump 01 of compressor 001A, which belongs to area 5134;

- B-C-5134001A-02 - Pump 02 of compressor 001A, which belongs to area 5134;

- B-C-5134001B-01 - Pump 01 of compressor 001B, which belongs to area 5134;

- B-C-5134001B-02 - Pump 02 of compressor 001B, which belongs to area 5134.

Note: It should be briefly summarized as: B-C-5134001A/B - 01/02.

e) Different pumps:

Identical pumps having the same function:
- B-C-5134001A-01A - Pump 01A of compressor 001A, which belongs to area 5134;

- B-C-5134001A-01B - Pump 01B do compressor 001A, which belongs to area 5134;

Identical pumps with the same function:
- B-C-5134001A-02A - Pump 02A of compressor 001A which belongs to area 5134;

- B-C-5134001A-02B - Pump 02B of compressor 001A which belongs to area 5134;

Identical pumps with the same function:

- B-C-5134001B-01A - Pump 01A of compressor 001B, which belongs to area 5134;

- B-C-5134001B-01B - Pump 01B of compressor 001B, which belongs to area 5134;

identical pumps with the same function:

INTERNA \ Qualquer Usuário

- B-C-5134001B-02A - Pump 02A of compressor 001B which belongs to area 5134;

- B-C-5134001B-02B - Pump 02B of compressor 001B which belongs to area 5134.

Note: It should be briefly summarized as: B-C-5134001A/B - 01A/B02A/B.

16.3.8. Package Units

16.3.8.1. The identification of package units as a set shall be made in the same way as for equipment in general, as described in items 3.2 and 5.1, with the symbols of the units indicated in item 15.4.

16.3.8.2. Whenever there is an interest in individually identifying the equipment comprising the package unit, their identification shall be composed of the equipment symbol followed by a hyphen and by the identification of the package unit and its sequential number.

Examples:

a) UC-1231001A/B - 2 Identical Compressor Package Units.

b) C-UC-1231001A - Compressor of Compressor Unit 001A of area 1231;
C-UC-1231001A-A - Compressor A of Compressor Unit 001A of area 1231;
C-UC-1231001A-B - Compressor B of Compressor Unit 001A of area 1231.

c) V-UC-1231001A-01 - Vessel 01 of Compressor Unit 001A of area 1231;
V-UC-1231001A-02 - Vessel 02 of Compressor Unit 001A of area 1231;
V-UC-1231001A-01A - Vessel 01A of Compressor Unit 001A of area 1231;
V-UC-1231001A-01B - Vessel 01B of Compressor Unit 001A of area 1231.

16.4. LIST OF EQUIPMENT CLASS SYMBOLS IN ALPHABETICAL ORDER

Table 4 - List of Equipment Class

Symbol	Equipment
A	Agitator, Mixer
AB	Shroud (control, sealing)
AC	Air Conditioner
AE	Aerator
AH	Hydraulic Accumulator
AL	Feeder (solids distributor)
AM	Sampler
AQ	Heater
AR	Quick Coupling (ships and mobile platforms – QCDC)
B	Pump
BC	Loading Arm (filling nozzle)

INTERNA \ Qualquer Usuário

Symbol	Equipment
BCP	Capacitor Bank
BL	Scale
BOP	Well Head Safety Valves (Blowout Preventer)
BQ	Briquetter
BR	Crusher
BT	Storage Battery
C	Compressor
CB	Storage Battery Charger
CBT	Terminal Block Box
CF	Frequency Converter
CH	Disconnecting Switch (dry and oil)
CI	Cyclone/Hydrocyclone
CM	Chimney, Stack
CN	Set of Cylinders and Flasks (e.g.: CO2, N2)
CO	Flood Gate, Sluice Gate
CP	Well Head
CX	Passage Box (electric systems)
CXP	Through-Out Concrete Boxes for Draining and Waste Treatment Purposes
D	Deaerator
DA	Decanter, Desander, Clarifier
DAA	Ventilation Damper (Watertight Dumper)
DB	Bus Bar Duct
DE	Electric Draining Equipment (Used in cathodic protection of pipelines)
DF	Fire Damper
DG	Tight Damper
DI	Diffuser
DJ	Circuit Breaker (medium and high voltage and relevant low voltage)
DL	Desalter
DMT	Modulating Damper
DR	Regulating Damper
DS	Mechanical Disintegrator
DSP	Overpressure Damper

INTERNA \ Qualquer Usuário

Symbol	Equipment
DT	Metal Detector
E	Ejector, Eductor
EB	Lifeboat/Rescue Boat/Inflatable Liferaft
EF	Sphere
EG	Mist Eliminator
EL	Elevator (including movable ladders for access to ships)
EM	Handling equipment other than these already defined in this list
EP	Fork Lift Truck for Handling Solids (tilting, rotating)
ES	Extractor (scrap, metals, etc.)
EX	Extruder
EXT	Exhauster
F	Furnace
FH	Harmonics Filter
FL	Flotation Unit
FLC	Flocculator
FR	Brake
FT	Filter
G	Gas Meter
GA	Gasifier
GD	Crane
GE	Electric Power Generator
GG	Gas Generator
GN	Hoist or Capstan
GR	Grate
GV	Steam Generator [see regulatory standard No. 13 (NR-13)]
GVC	Boiler [see regulatory standard No. 13 (NR-13)]
H	Hydrant
IN	DC/AC Inverter
JE	Expansion Joint
L	Scrubber
LP	Pig Launcher/Separator and Sphere (any type of pig)
LR	Pig Launcher/Receiver/Separator and Sphere (any type of pig)

INTERNA \ Qualquer Usuário

Symbol	Equipment
M	Electric motor
MA	Hose
MC	Internal Combustion Engine
MG	Machines in General
MH	Hydraulic Hammer (rock crusher)
MM	Material Mover (belt conveyer, bucket, helicoidal, screw)
MN	Monobuoy
MO	Grinder, Mill
MOH	Hydraulic Motor
MP	Pneumatic Motor
MR	Rotary Table
MV	Motorized Valve
P	Heat Exchanger (heater, reboiler, condenser, air cooler, cooler of air)
PA	Azimuthal Thruster
PCC	Direct Current Panel
PE	Sieve, Filtering Conveyor
PEH	Hydraulic Powered Watertight Door
PEM	Manual Watertight Door
PG	Steam Trap
PL	Lighting Panel
PLE	Emergency Lighting Panel
PLM	End-of-Line Manifold
PN	General Electric Panel (MCC, LDC, Switchboard)
PP	Precipitator
PR	Lightning Arrester
Q	Burner (torch)
R	Reactor, Regenerator
RC	Flame Arrester
RE	Retort
RF	Rectifier
RLC	Current Limiting Reactor
RM	Retaker

INTERNA \ Qualquer Usuário

Symbol	Equipment
RP	Pig Receiver (any type of pig)
RS	Grounding Resistor
S	Dryer
SA	Water Separator
SAO	Water/Oil Separator
SC	Centrifugal Separator
SD	Condensate Separator
SE	Substation
SF	Soot Blower (ramonador)
SG	Gas/Oil/Water Separator
SGL	Gas/Mud Separator
SI	Silo
SL	Silencer
ST	Soft Starter
SP	Blower
T	Tower (distillation, fractionating, stripping, and so on)
TA	Torch, Burner (flare)
TB	Steam or Air Turbine
TC	Current Transformer
TD	Waste Discharge Pipe
TE	Sewage Crusher (dejector)
TF	Power and Distribution Transformer
TFI	Instrument Feed Transformer
TG	Turbogenerator (the GE symbol for a turbogenerator shall be preferred)
TH	Hydraulic Turbine
TL	Lighting Transformer
TLE	Emergency Lighting Transformer
TN	Overhead Traveling Crane, Hoisting Device
TO	Oil Treater
TP	Potential Transformer
TQS	Storage or Mixing Tank
TR	Cooling Tower

INTERNA \ Qualquer Usuário

Symbol	Equipment
TS	Gas Turbine
TU	Davit
UPS	Uninterruptible Power System
UTR	Remote Terminal Unit
UV	Closed Circuit TV Cameras
V	Pressure Vessel, Drum
VN	Louver
VT	Air Supply Fan
VS	Line Visor (Flow Visor)
VV	Speed Variator (including reducer/multiplier)
Z	Industrial Equipment not Included in this Technical Specification

Table 5 - List of Symbols of Units (Package System)

Symbol	Equipment
UA	Heating and Drying Unit
UB	Pumping Unit
UC	Compressor Unit
UD	Water Desalting Unit
UE	Electrochlorinating Unit
UG	Electric Power Generating Unit
UH	Hydraulic Unit
UL	Liquefying and Reliquefying Unit
UM	Fluid Mixing Unit
UQ	Chemical Metering Unit
UR	Cooling (or Refrigerating) Unit
UT	Gas or Water Treating Unit

INTERNA \ Qualquer Usuário